GAME No. 0B38
Form No. 0B38-00300-0000

Eight ball CHAMP

Parts and Operating Manual

Bally/MIDWAY MFG. CO.

10601 W. Belmont Ave. · Franklin Park, Illinois 60131
Telephone (312) 451-9200

EIGHT BALL CHAMP

TABLE OF CONTENTS

SECTION 1

INSTALLATION AND GENERAL GAME OPERATION INSTRUCTIONS

DESCRIPTION	PAGE
I. INSTALLATION	1-1
II. GENERAL GAME OPERATION	1-2
III. TAILORING & TESTING THE GAME	1-3
IV. KEYBOARD GAME ADJUSTMENTS	1-5
A. CREDITS PER COIN ADJUSTMENTS	1-6
B. STANDARD GAME FEATURE OPTIONS	1-9
C. 8 BALL CHAMP FEATURE, OPERATION AND SCORING	1-11
D. BOOKKEEPING METERS	1-12
V. PLAYFIELD PANEL POST ADJUSTMENTS	1-13
VI. RECOMMENDED 3 & 5 BALL REGISTER SETTINGS	1-14
VII. RECOMMENDED SCORE CARDS	1-15
VIII. TROUBLESHOOTING ON LOCATION	1-16
X. ROUTINE MAINTENANCE ON LOATION	1-20
XI. SWITCH ASSEMBLY ADJUSTMENTS	1-20
XII. SERVICE HINTS	1-20
XIII. ABBREVIATED PARTS LIST	1-23

EIGHT BALL CHAMP

TABLE OF CONTENTS (cont'd)

SECTION 2
ILLUSTRATED PARTS BREAKDOWN

DESCRIPTION **PAGE**

FRONT 2-2
FRONT - PARTS LIST 2-3
BACKBOX ASSEMBLY 2-4
BACKBOX ASSEMBLY - PARTS LIST 2-5
CABINET ASSEMBLY 2-8
CABINET ASSEMBLY - PARTS LIST 2-9
BALL SHOOTER ROD & SPRING ASSEMBLY 2-14
BALL SHOOTER ROD & SPRING ASSEMBLY - PARTS LIST 2-15
COIN DOOR WITH CABLE ASSY. - PINBALL GAME - U.S.A. 2-16
COIN DOOR WITH CABLE ASSY. - PINBALL GAME - U.S.A. - PARTS LIST 2-17
PLAYFIELD REAR 2-20
PLAYFIELD REAR - PARTS LIST 2-21
PLAYFIELD FRONT 2-25
PLAYFIELD FRONT - PARTS LIST 2-27
DROP TARGETS: LEFT SINGLE: "E", "I", "G", "H" & "T" 2-31
DROP TARGETS: LEFT SINGLE: "E", "I", "G", "H" & "T" - PARTS LIST 2-33
TOP MOUNTED KICKER (BALL RETURN) 2-35
TOP MOUNTED KICKER (BALL RETURN) - PARTS LIST 2-36
FLIPPER ASSEMBLY - SINGLE SWITCH RIGHT 2-37
FLIPPER ASSEMBLY - SINGLE SWITCH RIGHT - PARTS LIST 2-38
FLIPPER ASSEMBLY - SINGLE SWITCH LEFT 2-39
FLIPPER ASSEMBLY - SINGLE SWITCH LEFT - PARTS LIST 2-40
FLIPPER ASSEMBLY - DOUBLE SWITCH RIGHT 2-41
FLIPPER ASSEMBLY - DOUBLE SWITCH RIGHT - PARTS LIST 2-42
THUMPER BUMPER ASSEMBLY 2-43
THUMPER BUMPER ASSEMBLY - PARTS LIST 2-44
EJECT HOLE ASSEMBLY 2-45
EJECT HOLE ASSEMBLY- PARTS LIST 2-46
SLINGSHOT KICKER ASSEMBLY 2-47
SLINGSHOT KICKER ASSEMBLY - PARTS LIST 2-48

EIGHT BALL CHAMP

TABLE OF CONTENTS (cont'd)

SECTION 3

COMPONENT LAYOUTS, SCHEMATICS & WIRING DIAGRAMS

DESCRIPTION	PAGE
6803 PINBALL POWER MODULE P.C.B. - COMPONENT LAYOUT	3-1 & 3-2
6803 PINBALL POWER MODULE P.C.B. - SCHEMATIC	3-3
SQUAWK AND TALK P.C.B. - COMPONENT LAYOUT	3-4
SQUAWK AND TALK P.C.B. - SCHEMATIC	3-5
6-DIGIT DISPLAY P.C.B. - COMPONENT LAYOUT	3-6
6-DIGIT DISPLAY P.C.B. - SCHEMATIC	3-7
7-DIGIT DISPLAY P.C.B. - COMPONENT LAYOUT	3-8
7-DIGIT DISPLAY P.C.B. - SCHEMATIC	3-9
6803 CONTROL BOARD P.C.B. - COMPONENT LAYOUT	3-10 thru 3-13
6803 CONTROL BOARD P.C.B. - SCHEMATIC	3-14 & 3-15
WIRING DIAGRAM - CABINET	3-16
WIRING DIAGRAM - PLAYFIELD	3-17
WIRING DIAGRAM - BACKBOX	3-18
EPROM LIST	INSIDE BACK COVER

BLOCK DIAGRAM—ELECTRONIC PINBALL GAME

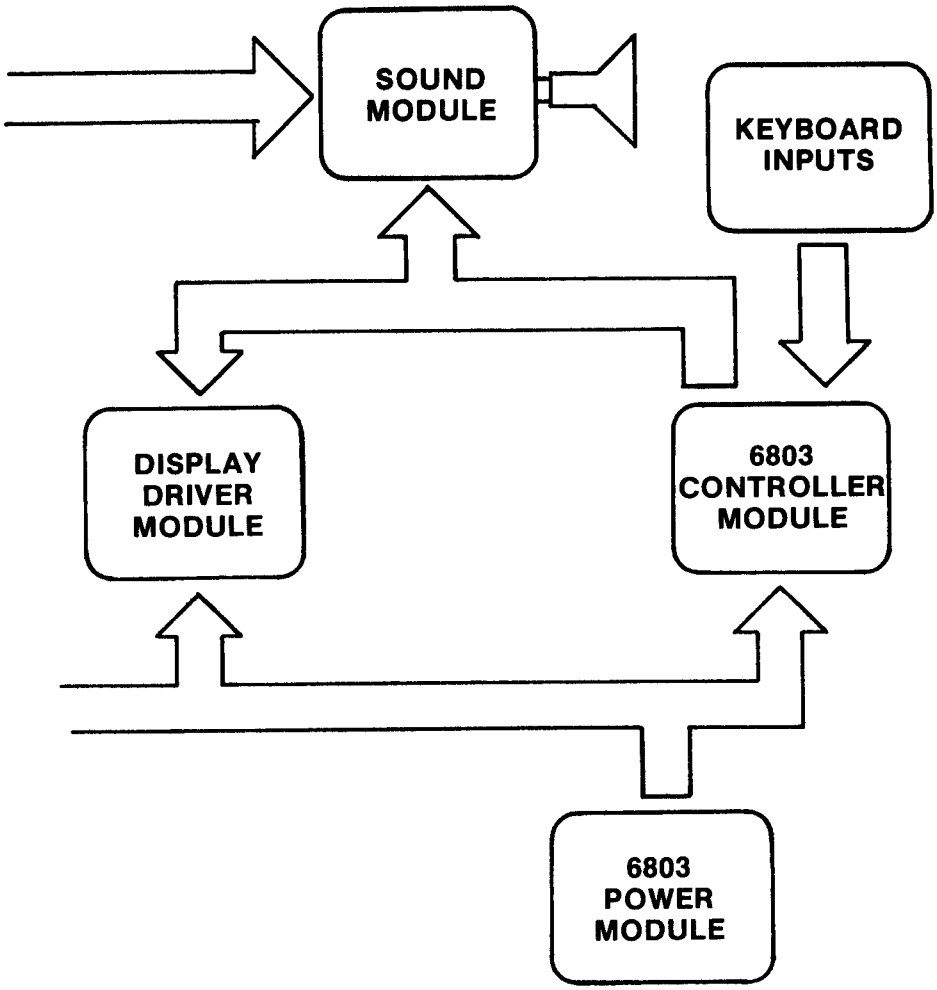

DETACHING OF PIN-GAME BACK BOX

When the back box is in an up-right positon and the 3/8" hold-down bolts are removed, the back box can be removed from the main cabinet by lifting the right corner of the back box (about 3/4") and pulling it slightly towards you. Now both hinges are disengaged and the back box can be removed.

I. INSTALLATION

Assemble the game as follows:

Bolt legs to cabinet. Bolt back box to cabinet. Use flat washers under bolt heads. Gently feed cable connectors and ground braid through cable port in back box. Screw ground braid to braid in back box. Carefully and fully insert connectors on printed circuit assemblies.

On all games there ae certain items that should be checked after shipment. These are visual inspections which may avoid time consuming service work later. Minor troubles caused by abusive handling in shipment are unavoidable. Cable connectors may be loosened, switches (especially tilt switches) may go out of adjustment. Plumb bob tilt switch should always be adjusted after game is set on location and leg levelers are adjusted.

Visual inspections before plugging in line cord:

1. Check that all cable connectors are completely seated on printed circuit assemblies.
2. Check that cables are clear of all moving parts.
3. Check for any wires that may have become disconnected.
4. Check switches for loose solder or other foreign material that may have come loose in shipment and could cause shorting of contacts.
5. Check wires on coils for proper soldering. Cold solder connections may not show up in factory inspection, but vibration in shipment may break contact.
6. Check that fuses are firmly seated and making good contact.
7. Check the transformer for any foreign material shorting across wiring lugs.
8. Check wiring of transformer to correspond to location voltage. See figure 1.

Check adjustment of the two (normally open) tilt switches:

1. Plumb bob tilt on left side of cabinet near front door.
2. Ball tilt above plumb bob tilt. Insert the smaller ball (15/16" dia.) into the ball tilt assembly, and adjust the bracket so the ball will roll free to contact the switch blade, if front of cabinet is raised.

TRANSFORMER CONNECTION INSTRUCTIONS

REFER TO BACK BOX WIRING DIAGRAM IN GAME MANUAL FOR TABLE "A"

Figure 1.

115 VAC, 2-8, 3-6, 7-10
120 VAC, 2-8, 4-6, 7-11
220 VAC, 4-8, 7-9
240 VAC, 4-8, 7-11

PART OF POWER TRANSFORMER MODULE LOCATED IN BACK BOX

II. GENERAL GAME OPERATION

Place ball into playfield by outhole.

Coin game. Coin should be rejected. Plug in line cord. Move power ON-OFF master switch at bottom right front corner of cabinet to "ON" position. The game will play a power-up tune to announce game-readiness. Drop targets are reset, scores are set to zero, alternating with the "High Score to Date", and the game is ready to play. Coin Game. The game should accept the coin and post credits* for coins accepted (adjustable). Pressing the credit button on the cabinet will cause the outhole kicker to serve the ball to the shooter alley. A game-up tune* is played to announce play-readiness.

One player is posted each additional time the credit button is pressed (one to four can play). The credits are reduced by one each time the credit button is pressed until the credits are reduced to zero.

Shooting the ball initiates play.

The game awards all points earned by the player. If spinner is turned and scoring when the ball hits a target, the spinner and the target scores are awarded.

When the ball enters the outhole, the bonus score is added to the total score. The player-up and/or ball in play on the back box is advanced one position. The outhole kicker serves the ball to the shooter alley and play is resumed. This continues until each player has played the allowable number of balls per game (adjustable). At this time 'Game Over' light is lit. A random Match* number appears and the "Match" light is lit. If the number is the same as the last two digits in a player's score, a free game is awarded.

Extra balls won during the course of the game are played immediately after the player's regular ball enters the outhole. The player-up and/or ball in play on the back box are not advanced for extra ball play. Bonus score is added to the player's score before the game serves the extra ball for play.

Scoring over 10,000,000 gives "High Score to Date" award.

At the end of the game, a "High Score to Date" is alternately flashed with all 4 player scores. If the "High Score to Date" is beat, this feature* awards free games (adjustable, using **REGISTER 15** as discussed on page 1-10).

Tilting the game results in loss of a ball. The flippers, thumper bumpers, etc. go 'dead'. Bonus points are not scored. The purpose of the tilt penalty is to discourage the player from jostling the machine in an attempt to prolong play. Game action becomes normal after the ball kicker assembly serves the ball to the shooter alley.

Slamming the machine results in loss of the game. All feature lights go out, the game goes "dead", and a time delay occurs. The purpose of the time delay is to discourage unnecessay abuse of the machine. After the delay, the "Game Over" light lights and the power-up tune is played. The time delay occurs anytime one of the slam switches is made to contact. There are two factory installed slam switches,one on the front door, and one on the left side of the cabinet. (Any number of slam switches could be installed by the operator, to meet his individual requirement.) The switch should be adjusted to have approximately 1/16" gap between the contacts. The weighted blade should be adjusted to attain the desired sensitivity. Decreasing the gap between contacts will make the switch more sensitive. Opening the gap will reduce sensitivity.

* Some tunes and features can be disabled or adjusted by operator if so desired. See Standard Game Feature Options on pages 1-9 and 1-10.

NOTE: Scoring and feature units will differ from game to game.

III. TAILORING & TESTING THE GAME

INTRODUCTION

One of the reasons for developing this new system is to provide more information to the operator. In the past, if a game was performing too liberally an operator could only guess what feature might be affecting his income. Through the process of trial and error a "good businessman" eventually found the problem and either changed score thresholds or flipped switches to get the game to perform in accordance with its location.

The new system introduces a subroutine that gives the operator more feedback on how the awards are being delivered. This subroutine allows the operator to change game features, awards and threshold settings. It also monitors specific specials awarded, game percentage and income.

All of this information is stored in memory locations or REGISTERS located in intergrated circuit U4. This memory remains intact with the game off through the use of a battery. Should erroneous information "sneak into" certain REGISTERS due to a weak battery, a flag is set telling the processor that the information stored is no longer valid. When this occurs, the processor resets these REGISTERS to factory settings, the next time the game is turned on. Also, the high score to date will flash all 5's on the 1st thru 4th player digital displays during the attract mode. In addition, the credit/coin code in REGISTER 17 goes to 01 (1 credit/1 coin for all coin chutes used) & the balls per game register (REGISTER 23) will default to 3. (3 balls per game.)

To simplify entry to the REGISTERS and SELF-TEST functions BALLY/MIDWAY has provided a keypad that allows the operator to go directly to the function or register in question. This elimiates the tedious procedure of repeatedly pressing the Self-Test Button to look at a certain REGISTER. It also ends the aggravation of having to open the backbox just to flip switches on the MPU Board.

For example, to look at the TOTAL PLAY REGISTER in the old system, you had to press the test button 11 times! Of course this gave you time to chat with the local Repair Expert and learn how he and Ernie always "put chewin' gum on the legs to keep the game from slidin'." But occaisionally, the conversation caused you to pass the REGISTER you were looking for, and you had to start over again.

With the new system, we simply hit the test button once and go to the specific REGISTER by using the keyboard.

If the REGISTER is used for Bookkeeping,(i.e. total coins chute #1) it is protected from change and may only be observed or reset to zero. No fabricated numbers may be introduced.

If the REGISTER is a game feature option (i.e. balls per game) it can be changed directly from the keyboard.

OPERATION

The keyboard is located on the right inside wall of the game near the front door. The cable has been lengthened, so that once the keyboard is removed, it may be easily operated from outside the game.

The first step is to press the black Test Button located on the front door once. This tells the processor to do the following:

1. Check to make sure that no switches wired in parallel with the keypad are closed.
2. If any of these switches are closed the game automatically jumps to STUCK-SWITCH Test (94 is shown in the Match/Credit Display) and flashes the number of the conflicting switch in all four player displays. By referring to the STUCK-SWITCH I.D. Table on page 1-18, we can pin-point the culprit immediately. When the switch is opened up the stuck-switch test now checks all of the other switches to insure that they're open. A flashing 00 in all four player displays indicates the switches are now open. Pressing the black Test Button should cause the game to exit STUCK-SWITCH Test and go into LAMP Test. (90 in the Match/Credit display) Pressing (KEYBD/CLR) button takes the game out of Lamp Test, displays 00 in the Match/Credit Display and the game is now ready for KEYBOARD ENTRY.
3. If there were no stuck switches in parallel with the keyboard, the game enters Keypad Mode and displays 00 in the Match/Credit display. The game is now ready for KEYBOARD ENTRY.

PLEASE NOTE: Some of the buttons on the KEYBOARD are not used but have been provided for future expansion. They are the keys (D), (E), (F), and (*).

KEYBOARD ENTRY

If you've reached this point with no problems you should find the rest of the procedure simple. Just press the number(s) of the REGISTER you want to see and press (ENTER). Use the REGISTER Table inside the game for a reference. As you press the number(s),they should appear in the Match/Credit Display. When you operate the (ENTER) button,the current information of the REGISTER will be shown in the Player #1 Display. If this REGISTER is not "protected" by the program, new information may be installed. Just press the numbers you want installed and they appear on the Player #2 Display. This allows you to compare the "old" information with the "new". Now press (ENTER) and both displays show the "new"

information. If you made a mistake, just punch in the correct number so it appears in Player #2 and press (ENTER) again. This inserts the corrected information into the REGISTER and both displays again show the new numbers.

Example: Let's say you want to change a game from 5 balls per game to 3 balls per game. We look up this function in the REGISTER Table and find the feature is located in REGISTER 23. Just press buttons (2), (3), and (ENTER). The Match/Credit Display shows 23 and Player #1 should show a 5. Now press (3) (3 appears in the Player #2 Display) and (ENTER). The 3 is now also in Player #1 and therefore in the REGISTER.

Suppose you accidentally pressed (4) instead of (3) then (ENTER). The number 4 is now in the REGISTER. To correct this, simply press (3),(ENTER) and the REGISTER now shows a 3.

NOTE: If the number you entered is invalid, the game will make a funny noise and send you back to REGISTER 00. (the start)

DESCRIPTION OF TESTS

LAMPS- (Function 90) This causes all of the switched illumination lites to flash on and off repeatedly until the test is EXITED.

DISPLAYS- (Function 91) When the game is placed in this test, each display will cycle from 0 thru 9 in all of its digits. While this isn't as fascinating as gazing into an open fireplace it can usually help you localize a problem to a specific display or component.

SOLENOIDS - (Function 92) All of the game solenoids energize in sequence as defined by the SOLENOID IDENTIFICATION TABLE on page 1-18. **PLEASE NOTE:** The flipper buttons must be held closed to allow the flippers to pull-in during this test, YOUR COOPERATION IS APPRECIATED.

SOUND - (Function 93) This test allows the Controller Board to talk to the Sound Board. The Sound Board doesn't talk back to the Controller Board, but it should to you. About once a second it will generate a noise (from the Programmer's top 40 favorites) almost guaranteed to drive your location crazy. So please keep the volume low if you intend to stay in this test any length of time.

STUCK-SWITCH - (Function 94) With this test we can pinpoint a troublesome switch quickly by looking at the Displays. If 00 is flashing in the 4 Player Displays - to the computer that means there are no stuck-switches. When a number other than 00 is flashing in these displays, just refer to the STUCK-SWITCH IDENTIFICATION TABLE on page 1-18. This table, along with its associated playfield drawing should allow you to find the switch immediately.

In addition to locating stuck-switches this test is very useful in confirming the validity of a switch. Sometimes when a serviceman is repairing a connector or soldering a bunch of wires he is pressed for time. Using this test and the Table in the book is the easiest and most accurate way of proving he's connected the wires for the '10 Point Rebound' rather than a parallel circuit to the Coin Switch.

IV. KEYBOARD GAME ADJUSTMENTS

TEST FUNCTIONS

FUNCTION #	TEST
90	LAMP TEST
91	DISPLAY TEST
92	SOLENOIDS TEST
93	SOUND TEST
94	STUCK SW. TEST

REGISTER TABLE

REG. #	DESCRIPTION	VALID ENTRY
1	TOTAL PLAYS	
2	TOTAL REPLAYS	
3	COINS CHUTE #1	
4	COINS CHUTE #2	
5	COINS CHUTE #3	
6	# TIMES HI SCORE BEATEN	
7	GAME PERCENTAGE	
8	GAME TIME (MINUTES)	
9	SERVICE METER	
10	CURRENT CREDITS	0 thru 5
11	SPECLS AWARDED FROM PANEL	
12	THRESHOLD #1	0 thru 9,999,999
13	THRESHOLD #2	0 thru 9,999,999
14	THRESHOLD #3	0 thru 9,999,999
15	HI SCORE TO DATE	0 thru 9,999,999
16	MAX CREDITS ALLOWED	1 thru 40
17	COINS OPTION	0 thru 99
18	COINS OPTION CHUTE #1	1 thru 50
19	COINS OPTION CHUTE #2	1 thru 50
20	COINS OPTION CHUTE #3	1 thru 50
21	COINS FACTOR	1 thru 50
22	BONUS CREDITS	0 thru 50
23	BALLS PER GAME	1 thru 5
24	SCORING THRESHOLD MODE	0 thru 3
25	SPECIAL MODE	0 thru 3
26	HI SCORE AWARD	0 thru 3
27	SOUNDS MODE	0 thru 3
28	GERMAN ONLY	0 thru 9,999,999
29	MATCH OPTION	1 = ON 0 = OFF
30	DISPLAY CREDITS	1 = YES 0 = NO
31	FREE GAMES/GAMES ALLOWED	1 = UNLIMITED 0 = ONE PER GAME
32	# OF SPCLS AWARDED FROM THRES. #1	
33	# OF SPCLS AWARDED FROM THRES. #2	
34	# OF SPCLS AWARDED FROM THRES. #3	
35	# OF SPCLS AWARDED FROM 120K	
36	# OF SPCLS AWARDED FROM 'EIGHT'	
37	# OF SPCLS AWARDED FROM ROLL UP LANES	
38	# OF SPCLS AWARDED FROM LEFT OUTLANE	
39	# OF SPCLS AWARDED FROM RIGHT OUTLANE	
40	(NOT USED)	
41	# OF EXTRA BALLS AWARDED	
42	FREE PLAY	65 = FREE PLAY/ANY OTHER # = COIN OPERATED
43	X-BALL OPTION	1 = X-BALL FLASH AT BEGINNING 0 = FLASH WHEN 'B' OF 'BALL' MADE
44	SPECIAL AT 120K/240K	1 = AWARD WITH 120 K 0 = AWARD WITH 240K
45	# OF SPCL FROM 120/240K	1 = UNLIMITED 0 = ONE PER GAME
46	RECALL 'CHAMP' LITES OUT	1 = YES 0 = NO
47	ATTRACT SPEECH	1 = YES 0 = NO
48	RECALL ROLL UP VALUES	1 = YES 0 = NO
49	SPINNER START AT	1 = 1000 POINTS 0 = 100 POINTS
50	CHEAP SQK/SQK & TALK	1 = SQUAWK & TALK 0 = CHEAP SQUEAK
51	ROLL UP LANES SPCL FLASH WITH	7 = 30K, 6 = 10K, 5 = 50K, 4 = 60K, 3 = 70K, 2 = 80K, 1 = 90K, 0 = 100K

A. CREDITS PER COIN ADJUSTMENT

Register tables 17, 18, 19, 20 and 21 have been reserved for setting coin/credit options. Please read the following instructions carefully so that you may take full advantage of these registers.

REGISTER NO. 17 - CREDITS PER COIN MENU

This register contains a menu of up to 79 preset credit /coin option settings. Each option setting is numbered. Below you will find a sample portion of the main menu.

Say, for example, you want your game to give 1 credit when 2 coins are dropped through any coin chute. First you would look at the menu to see if this setting is included. Once you find it, refer to the left column for the OPTION INDEX. The example menu below includes the setting you're looking for...1 credit for 2 coins. The number listed in the left column is the OPTION INDEX, which in this case is 36. Using the keypad, go to register no. 17 and enter the number 36 into it.

Say for example, you want your game to give 1 credit when 2 coins are dropped through any coin chute. However, this time you want to give the player a bonus credit when he pays for two. In other words,when the player inserts four coins to pay for two credits, he will recieve a bonus credit for a total of three credits. First you would look at the menu to see if this setting is included. Once you find it, refer to the left column for the OPTION INDEX. The example menu below includes the setting you're looking for...1 credit for 2 coins, 3 credits for 4 coins. The number listed in the left column is the OPTION INDEX, which in this case is 37. Using the keypad, go to register #17 and enter the number 37. **When register #17 is set to any value other than zero (0), the values in registers #18, #19, #20, and #21 will be ignored.**

*See CUSTOM CREDITS PER COIN OPTIONS for the use of the registers.

OPTION INDEX	CREDITS/COINS CHUTE #1	CREDITS/COINS CHUTE #2	CREDITS/COINS CHUTE #3	BONUS CREDIT AT
35	14 / 1 coin	14 / 1 coin	14 / 1 coin	
36	1 / 2 coins	1 / 2 coins	1 / 2 coins	
37	1 / 2 coins	1 / 2 coins	1 / 2 coins	2 credits

CREDITS PER COINS MENU - REGISTER #17

OPTION INDEX	CREDITS/COINS CHUTE #1	CREDITS/COINS CHUTE #2	CREDITS/COINS CHUTE #3	BONUS CREDIT AT
1	1 / 1 coin	1 / 1 coin	1 / 1 coin	
2	1 / 1 coin	1 / 1 coin	1 / 1 coin	2 credits
3	1 / 1 coin	1 / 1 coin	1 / 1 coin	3 credits
4	1 / 1 coin	1 / 1 coin	1 / 1 coin	4 credits
5	1 / 1 coin	1 / 1 coin	1 / 1 coin	5 credits
6	1 / 1 coin	2 / 1 coin	2 / 1 coin	
7	1 / 1 coin	3 / 1 coin	3 / 1 coin	
8	1 / 1 coin	4 / 1 coin	4 / 1 coin	
9	1 / 1 coin	5 / 1 coin	5 / 1 coin	
10	1 / 1 coin	1 / 2 coins	1 / 2 coins	
11	1 / 1 coin	1 / 3 coins	1 / 3 coins	
12	1 / 1 coin	1 / 4 coins	1 / 4 coins	
13	1 / 1 coin	1 / 5 coins	1 / 5 coins	
14	2 / 1 coin	2 / 1 coin	2 / 1 coin	
15	2 / 1 coin	2 / 1 coin	2 / 1 coin	4 credits
16	2 / 1 coin	2 / 1 coin	2 / 1 coin	6 credits
17	2 / 1 coin	2 / 1 coin	2 / 1 coin	8 credits
18	2 / 1 coin	2 / 1 coin	2 / 1 coin	10 credits
19	2/ /1 coin	1 / 1 coin	1 / 1 coin	
20	2 / 1 coin	3 / 1 coin	3 / 1 coin	
21	2 / 1 coin	4 / 1 coin	4 / 1 coin	
22	2 / 1 coin	5 / 1 coin	5 / 1 coin	
23	2 / 1 coin	1 / 2 coins	1 / 2 coins	
24	2 / 1 coin	1 / 3 coins	1 / 3 coins	

CREDITS PER COINS MENU - REGISTER #17 (cont'd)

OPTION INDEX	CREDITS/COINS CHUTE #1	CREDITS/COINS CHUTE #2	CREDITS/COINS CHUTE #3	BONUS CREDIT AT
25	2 / 1 coin	1 / 4 coins	1 / 4 coins	
26	2 / 1 coin	1 / 5 coins	1 / 5 coins	
27	3 / 1 coin	3 / 1 coin	3 / 1 coin	
28	4 / 1 coin	4 / 1 coin	4 / 1 coin	
29	5 / 1 coin	5 / 1 coin	5 / 1 coin	
30	6 / 1 coin	6 / 1 coin	6 / 1 coin	
31	7 / 1 coin	7 / 1 coin	7 / 1 coin	
32	8 / 1 coin	8 / 1 coin	8 / 1 coin	
33	9 / 1 coin	9 / 1 coin	9 / 1 coin	
34	12 / 1 coin	12 / 1 coin	12 / 1 coin	
35	14 / 1 coin	14 / 1 coin	14 / 1 coin	
36	1 / 2 coins	1 / 2 coins	1 / 2 coins	
37	1 / 2 coins	1 / 2 coins	1 / 2 coins	2 credits
38	1 / 2 coins	1 / 2 coins	1 / 2 coins	3 credits
39	1 / 2 coins	1 / 2 coins	1 / 2 coins	4 credits
40	1 / 2 coins	1 / 2 coins	1 / 2 coins	5 credits
41	1 / 2 coins	1 / 1 coin	1 / 1 coin	
42	1 / 2 coins	2 / 1 coin	2 / 1 coin	
43	1 / 2 coins	3 / 1 coin	3 / 1 coin	
44	1 / 2 coins	4 / 1 coin	4 / 1 coin	
45	1 / 2 coins	5 / 1 coin	5 / 1 coin	
46	1 / 2 coins	1 / 3 coins	1 / 3 coins	
47	1 / 2 coins	1 / 4 coins	1 / 4 coins	
48	1 / 2 coins	1 / 5 coins	1 / 5 coins	
49	3 / 2 coins	3 / 2 coins	3 / 2 coins	6 credits
50	3 / 2 coins	3 / 2 coins	3 / 2 coins	9 credits
51	3 / 2 coins	3 / 2 coins	3 / 2 coins	12 credits
52	3 / 1 coin	3 / 1 coin	3 / 1 coin	6 credits
53	4 / 1 coin	4 / 1 coin	4 / 1 coin	8 credits
54	5 / 1 coin	5 / 1 coin	5 / 1 coin	10 credits
55	1 / 3 coins	1 / 3 coins	1 / 3 coins	
56	1 / 3 coins	1 / 3 coins	1 / 3 coins	2 credits
57	1 / 3 coins	1 / 3 coins	1 / 3 coins	3 credits
58	1 / 3 coins	1 / 3 coins	1 / 3 coins	4 credits
59	1 / 3 coins	1 / 3 coins	1 / 3 coins	5 credits
60	2 / 3 coins	2 / 3 coins	2 / 3 coins	
61	2 / 3 coins	2 / 3 coins	2 / 3 coins	4 credits
62	2 / 3 coins	2 / 3 coins	2 / 3 coins	6 credits
63	2 / 3 coins	2 / 3 coins	2 / 3 coins	8 credits
64	2 / 3 coins	2 / 3 coins	2 / 3 coins	10 credits
65	5 / 3 coins	5 / 3 coins	5 / 3 coins	
66	1 / 4 coins	1 / 4 coins	1 / 4 coins	
67	3 / 4 coins	3 / 4 coins	3 / 4 coins	
68	1 / 5 coins	1 / 5 coins	1 / 5 coins	
69	2 / 5 coins	2 / 5 coins	2 / 5 coins	
70	3 / 5 coins	3 / 5 coins	3 / 5 coins	
71	4 / 5 coins	4 / 5 coins	4 / 5 coins	
72	1 / 1 coin	0 / 1 coin	6 / 1 coin	
73	0 / 1 coin	6 / 1 coin	3 / 1 coin	
74	1 / 2 coin	3 / 1 coin	7 / 1 coin	
75	1 / 1 coin	2 / 1 coin	5 / 1 coin	
76	1 / 1 coin	3 / 1 coin	10 / 1 coin	
77	4 / 1 coin	0 / 1 coin	1 / 1 coin	
78	0 / 1 coin	1 / 2 coins	1 / 1 coin	
79	2 / 1 coin	4 / 1 coin	12 / 1 coin	

REGISTERS #18, #19, #20, and #21 -CUSTOM CREDITS PER COIN OPTIONS

These registers are used only when the desired credit/coin setting does not appear on the **CREDITS PER COIN MENU (see register #17). Register #17 MUST be set for zero (0) in order to use these four registers.** This procedure allows you to set any credit/coin combination manually. Please read the following instructions carefully. Registers #18,#19 and #20 represent the three coin chute options. Each coin chute option may be set to give a different number of credits per coin, or they may be set the same. Register #21 represents the coin factor. All four of these registers work together to deliver virtually any combination desired.

The coin chute options represent the credits awarded at each coin chute and the coin factor represents the coins. Although each coin chute option may be set differently, they must have a common denominator...the coin factor, register #21. To arrive at the common denominator, (the coin factor), you must first decide what you want each coin chute option to be. Let's say, for example, you want coin chute #1 to give 1 credit for 1 coin, coin chute #2 to give 2 credits for 1 coin and coin chute #3 to give 1 credit for 2 coins.

This is how it would look:

COIN OPTIONS / COIN FACTOR

COIN CHUTE OPTION #1	1 credit / 1 coin
COIN CHUTE OPTION #2	2 credit / 1 coin
COIN CHUTE OPTION #3	1 credit / 2 coin

The COIN FACTOR must be equal from one Coin Chute to another and above it is not. Therefore you must find a common denominator. In most cases, this will be the largest number. In the illustration above, the largest number under COIN FACTOR is 2 at Coin Chute #3. In order to change the COIN FACTOR in the other two coin chutes to equal 2, we must also change the COIN OPTIONS in those chutes. Since we must double the COIN FACTOR in chute #1 and #2 to equal 2, we must also double the COIN OPTIONS in those coin chutes. Whatever we do to the COIN FACTOR to make it equal to the largest number, we must also do to the COIN OPTION. For example:

COIN OPTIONS / COIN FACTOR

COIN CHUTE OPTION #1	1 credit / 1 coin
would become	
COIN CHUTE OPTION #1	2 credit / 2 coin
and	
COIN CHUTE OPTION #2	2 credit / 1 coin
would become	
COIN CHUTE OPTION #2	4 credit / 2 coin

The finished layout would then look like this:

COIN OPTIONS/COIN FACTOR

Register #18 = COIN CHUTE OPTION #1 = 2 credit/ 2 coin
Register #19 = COIN CHUTE OPTION #2 = 4 credit/ 2 coin
Register #20 = COIN CHUTE OPTION #3 = 1 credit/ 2 coin
Register #21 = COMMON COIN FACTOR = 2

As you see, we now have **one** COIN FACTOR that is common to all three coin chutes...2. We now have what we need to enter the correct values into registers #18, #19, #20, and #21.

REGISTER #18 = 2
REGISTER #19 = 4
REGISTER #20 = 1
REGISTER #21 = 2

REGISTER NO. 22 - BONUS CREDITS

This register is used in conjunction with the Custom Coin Option Register #18, #19, # 20, and #21. The number entered in register # 22 determines when a bonus credit will be delivered while purchasing credits.

For example, entering a '4' into register #22 will give the player an extra credit for every 4 credits purchased prior to starting the game. This allows the operator the ability to provide an incentive to the player when the Custom Coin Option Registers are used.

PLEASE NOTE: When register #17 is set to any number other than '0' registers #18 through #22 will be ignored.

INCOME BOOKKEEPING REGISTERS

Specific registers have been assigned to keep track of coins dropped into the game.

REGISTER #	DISPLAYS
3	Coin Chute #1 (Left)
4	Coin Chute #2 (Center)
5	Coin Chute #3 (Right)

These registers may not be altered, but can be RESET by entering '0'.

One additional meter is provided to record the total number of Service Credits entered. This information is stored in register #9. The Service Credits feature is provided to allow the operator to test the game under normal conditions without altering the Coin Chute or setting the game on free play.

To enter Service Credits simply go to register #10 - Current Credits - and enter a number from 1 through 5. **NOTE:** This feature will not allow any credits to be entered if the Current Credits register is displaying 5 or greater. Then press the game button on the keyboard and you're ready to start playing by operating the Credit Button.

B. STANDARD GAME FEATURE OPTIONS

MAXIMUM CREDITS; REGISTER 16

The maximum credits accepted by tne machine limits the number of games that can be accumulated by coining, by winning replays, or both. The maximum number of credits is selectable by means of setting REGISTER 16. Any number entered between '1' and '40' will set the corresponding credit limit.

BALLS PER GAME; REGISTER 23

The number of balls per game can be set by REGISTER 23. Any number entered from 1 through 5 will set the corresponding number of balls per game.

MATCH FEATURE; REGISTER 29

When the Match Feature is ON, a random number appears on the Match/Credit window and the word Match is illuminated. If the number matches the tens digit in a player's score, a free game is awarded. The Match Feature creates an incentive to play.

MATCH	REGISTER 29
ON	1
OFF	0

CREDIT DISPLAY; REGISTER 30

CREDITS DISPLAYED	REGISTER 30
YES	1
NO	0

HIGH SCORE FEATURE; REGISTER 24

The game is designed to award an Extra Ball or Free Game at each of the two or three score levels.

AWARD	REGISTER 24
REPLAY	ENTER '3'
EXTRA BALL	ENTER '2'
NOVELTY	ENTER '1'
NO AWARD	ENTER '0'

PLAYFIELD SPECIALS FEATURE; REGISTER 25

This feature allows the operator the flexibility to award a REPLAY, EXTRA BALL, or SCORE (NOVELTY) when a special is scored.

AWARD	REGISTER 25
REPLAY	ENTER '3'
EXTRA BALL	ENTER '2'
NOVELTY	ENTER '1'
NO AWARD	ENTER '0'

HIGH SCORE TO DATE OR OVER 10,000,000 SCORE FEATURE; REGISTER 26

The game is designed to award free games as an option if high score to date is beat or player exceeds 10,000,000 points. Each time this happens, the high score will reset to 1,999,990 as new high score to beat. This score is displayed on all 4 player score displays at the end of each game as an incentive to play.

HIGH SCORE TO DATE FEATURE	REGISTER 26
NO AWARD	ENTER '0'
ONE CREDIT	ENTER '1'
TWO CREDITS	ENTER '2'
THREE CREDITS	ENTER '3'

State and local laws may regulate the use of the above features, and they have been designed to allow for appropriate adjustment in order to conform to such requirements.

SOUND OPTIONS; REGISTER 28

SOUND MODE

The game is designed to make several tones and noises to announce power-up, game-up, etc. The tones are intended to atract to the game and increase game usage.

Four options may be selected by REGISTER 28.

Enter '0'
Most switches associated chimes without feature background.

Enter '1'
Playfield switches associated chimes with background.

Enter '2'
Most scoring will have a noise effect without background.

Enter '3'
Most all scoring will have a noise effect with background.

GAME OVER ATTRACT SOUND; REGISTER 47

This game has been designed to attract attention in the game over mode by periodically saying "Quit Talking and Start Chalking". This feature is an option that can be removed by setting REGISTER 47 to '0'. When this REGISTER is set to '1', the game will utter it's attract phrase approximately every 5 minutes.

ALTERNATE SOUND BOARDS; REGISTER 50

This game has been programmed to talk to either the Squawk & Talk or Cheap Squeak sound boards. Setting REGISTER 50 to '1' only allows communication to the Squawk & Talk sound board. Entering '0' only allows it to talk to the Cheap Squeak sound board.

NUMBER OF GAMES REPLAYS PER GAME ADJUSTMENT; REGISTER 29

LIBERAL - ENTER '1' All replays earned will be collected.
CONSERVATIVE - ENTER '0' Only 1 replay per player per game.

FREE PLAY; REGISTER 42

This feature is designed to enable the operator to set the game on FREE PLAY. Entering 65 sets the game into FREE PLAY mode. Entering any number other than 65 sets the game into the coin operated mode.

HIGH SCORE FEATURE ADJUSTMENTS; REGISTER 12,13 & 14

The game is designed to award an extra ball (option) or a free game at each of three score levels. The recommended levels are on the score card in the game.

Any level from 0 to 9,999,999 can be set, as desired. It is also possible to reset or turn off any or all of the levels by entering '00' in the respective REGISTER.

HIGH SCORE TO DATE FEATURE	REGISTER 26
NO AWARD	ENTER '0'
ONE CREDIT	ENTER '1'
TWO CREDITS	ENTER '2'
THREE CREDITS	ENTER '3'

HIGH SCORE TO DATE AND 10,000,000 FEATURE; REGISTER 15

The game is designed to award free games when 'High Score to Date' is beat or if the player exceeds 10,000,000 points.

It is recommended that the level, which will build with play, be periodically reset to the factory recommended level to encourage game play. The adjustment procedure is the same as for the High Score Feature Adjustment.

NOTE: THE HI-SCORE REGISTERS WILL REVERT BACK TO FACTORY SETTINGS IF THE CONTROL BOARD BATTERY FAILS. ALSO, THE HI-SCORE-TO-DATE WILL FLASH ALL 5's IN ALL DISPLAYS DURING THE ATTRACT MODE.

C. 8 BALL CHAMP FEATURE, OPERATION AND SCORING

CHAMP FEATURE

This feature is achieved by operating the C-H-A-M-P roll-over lane switches. Each switch scores 3000 points and turns off its respective lane lite. C-H-A-M-P lane lites **change** lanes when the right 'Flipper Button' is operated for simplicity and skill.

1st time C-H-A-M-P completed:
'Playfield Scores Double' lite starts flashing-playfield scores double. 'Spinner' value will increase.*

2nd time C-H-A-M-P completed:
'Playfield Scores Triple' lite starts flashing-playfield scores Triple. 'Spinner' value will increase.*

3rd time C-H-A-M-P completed:
'Spinner' value will increase.*
Left outlane 'special' lite starts flashing and alternates with right outlane 'Special' lite each time a sling shot switch is operated.

4th time C-H-A-M-P completed:
Both left & right outlane 'Special' lites start flashing. Operating either switch awards a special, after which, both 'Special' lites go out.

*Initial 'Spinner' value can be set by REGISTER 46. Entering '0' initializes 'Spinner' value at 100 points. Entering '1' initializes 'Spinner' value at 1000 points. Each time C-H-A-M-P is completed, the 'Spinner' value increases, lighting the corresponding lite up to a maximum of 5000 points.

NOTE: Recall 'CHAMP' can be set by REGISTER 46. Entering '0' will re-lite all C-H-A-M-P lites that were turned off on a previous ball. Entering '1' will recall any C-H-A-M-P lites that were on or off on a previous ball.

8 BALL FEATURE

First and third players shoot for 1 through 7 solid balls. Second and fourth players shoot for 9 through 15 striped balls. However, all 14 ball lites (stripes & solids) are on the 'Pool Table' in the center of the playfield. Each player can spot his respective ball lites from the 'Pool Table' to the 'Bonus Rack' by operating 5 single 'Drop Targets', each of which score 500 points.

To complete a 1 through 7 or 9 through 15 'Bonus Rack', the upper left & right 'Pool Table Drop Targets' must be dropped two times each, as each pocket has two lites to spot. In order to achieve this, operate the 'I' and the 'H' 'Stand Up Targets', which will reset it's respective 'Pool Table Drop Target' so it can be dropped again to spot the second ball lite. When the 'Bonus Rack' is completed, the Top Saucer '8 Ball' lite will start flashing. To make the '8 Ball', the player must shoot the ball up thru the upper left scoop and into the saucer. Making the '8 Ball' shot lites the '120,000 Bonus' lite and resets the '8 Ball' feature. Completing the '8 Ball ' feature the second time lites the '240,000' lite and resets the '8 Ball' feature.

When the ball drains to the outhole, each lit 'Bonus Rack' ball lite scores 15,000 points.

NOTE: 'Special at 120/240K' can be set by REGISTER 44. Entering '0' causes the 'Special Lite' to be turned on when the 120K lite is turned on so the special will be awarded at 240K. Entering '1' turns on the 'Special Lite' at the start of the game and awards the Special when 120K is achieved.

'Number of Specials from 120/240K' can be set by REGISTER 45. Entering '0' will allow only one Special for the feature. Entering '1' will award a Special every time the '8 Ball' feature is completed and another 120K is added to the bonus.

TOP SAUCER FEATURE

Every time the ball lands in the top 'Saucer' it will award the flashing bonus multiplier value and start flashing the next highest multiplier. When '5X Multiplier' is achieved the asucer will award 100,000 points each successive time the ball is dropped in the saucer.

E-I-G-H-T FEATURE

Operating the E-I-G-H-T 'Stand Up Targets' will spot the respective E-I-G-H-T Rack lites. Completing E-I-G-H-T the first time will award an 'Extra Ball '* and lite the 'B' in the word B-A-L-L. Completing E-I-G-H-T the second time will award a 'Special' and lite the 'A' in the word B-A-L-L.

When the ball drains to the outhole, each lit E-I-G-H-T lite scores 10,000 points and each lit B-A-L-L lite scores 50,000 bonus points. All lit E-I-G-H-T & B-A-L-L lites remain lit from ball to ball.

*'X-Ball Option' can be set by REGISTER 43. Entering '0' will cause the 'Extra Ball' lite to flash after the 'B' lite in B-A-L-L is lit. Entering '1' will flash the 'Extra Ball' lite at start of the game.

LEFT & RIGHT ROLL UP LANE FEATURE

When the ball rolls over either of the upper left or right roll-over buttons the first time, 5000 points will be scored and the 10,000 feature lite on both sides will lite. The second time...10,000 points will be awarded, the 10,000 lites go out & the 20,000 lites lite. This sequence will continue until a maximum of 100,000 points is achieved.

'Roll-Up Lanes Special' can be set by REGISTER 51 to flash with:

ROLL-UP BONUS SPECIAL VALUE	ENTER
30K	7
40K	6
50K	5
60K	4
70K	3
80K	2
90K	1
100K	0

The lit Roll-Up lite values may be recalled from ball to ball by entering '1' in REGISTER 48. Entering '0' in this register turns off the recall feature.

THUMPER BUMPERS

Always score 1,000 points.

D. BOOKKEEPING METERS

The program in this game has been structured to provide the operator with what we believe to be a simple and efficient method of determining **how** game specials are being awarded. The following REGISTERS display specific 'Special Award' areas so the operator can readily see how liberal or conservative a particular feature or group of features is performing:

STANDARD REGISTERS

REGISTER #	DISPLAYS
1	Total Plays
2	Total Replays
6	Total Number of Times the Hi-Score is Beaten
7	Game Percentage
8	Total Game Time (Minutes)
11	Total Specials Awarded from Playfield Only
32	Total Specials Awarded from Threshold #1
33	Total Specials Awarded from Threshold #2
34	Total Specials Awarded from Threshold #3
41	Total Number of Extra Balls Awarded

SPECIAL REGISTERS

REGISTER #	DISPLAYS
35	Total Specials Awarded from the 120K Feature
36	Total Specials Awarded from the E-I-G-H-T Feature
37	Total Specials Awarded from Roll-Up Lanes Feature
38	Total Specials Awarded from Left Out Lane Feature
39	Total Specials Awarded from Right Out Lane Feature

After reviewing the above **REGISTERS,** you may wish to tailor a feature or two for your location. Simply review the game's FEATURE, OPERATION AND SCORING section of this manual.

NOTE: All the above registers can not be altered - they may only be reset by entering '0'.

V. PLAYFIELD PANEL POST ADJUSTMENTS:

Posts that control left and right outlane opening on panel can be removed to make access to outlanes easier or harder for ball to enter. See Figure II.

Easier entry will decrease playing time and scoring (conservative).
Harder entry will increase playing time and scoring (liberal).

VI. RECOMMENDED 3 & 5 BALL REGISTER SETTINGS

REGISTER	FUNCTION	3-BALLS	5-BALLS
23	Balls per Game	03	05
43	X-Ball option	01	00
44	Special at 120K/240K	01	00
45	# of Specials from 120K/240K	01	01
46	Recall "C-H-A-M-P"	01	01
47	Attract Speech	01	01
48	Recall Roll-over Values	01	01
49	Spinner start at 1K	01	01
50	Cheap Squeak/Squawk & Talk	01	01
51	Roll-over Lanes Special Flash	03	00

REPLAYS	**3-BALL**	**5-BALL**
Instruction Card	M051-00B38-A030	M051-00B38-A030
Score Cards	M051-00B38-A036	M051-00B38-A035
Playfield Specials	Register 25, enter "3"	Register 25, enter "3"
Match	Register 29, enter "1"	Register 29, enter "1"
High Score to Date (3 Replays)	Register 26, enter "3"	Register 26, enter "3"

X-BALL		
Instruction Card		M051-00B38-A031
Score Card		M051-00B38-A035 w/M051-00B38-A074
Playfield Specials		Register 25, enter "2"
Match		Register 29, enter "0"
High Score to Date		Register 26, enter "0"

NOVELTY		
Instruction Card	M051-00B38-A032	M051-00B38-A032
Score Card	M051-00B38-A038	M051-00B38-A037
Playfield Specials	Register 25, enter "1"	Register 25, enter "1"
Match	Register 29, enter "0"	Register 29, enter "0"
High Score to Date	Register 26, enter "0"	Register 26, enter "0"

EIGHT BALL CHAMP
RECOMMENDED INSTRUCTIONS,SCORE CARDS & HIGH SCORE FEATURE SETTINGS

3-BALL

REPLAYS

Instruction Card	M051-00B38-A030
Score Card	M051-00B38-A036

1 Replay at 1,500,000
1 Replay at 3,000,000

5-BALL

REPLAYS

Instruction Card	M051-00B42-A030
Score Card	M051-00B42-A035

1 Replay at 2,000,000
1 Replay at 4,000,000

EXTRA BALL

Instruction Card	M051-00B38-A031
Score Card	M051-00B-A035 w/M051-00B38-A074

1 Extra Ball at 2,000,000
1 Extra Ball at 3,700,000

HIGH GAME TO DATE (reset periodically)

3-BALL.....4,000,000

5-BALL.....5,000,000

ADDITIONAL CARDS

REPLAYS

M051-00B38-A040	1,000,000	2,500,000
M051-00B38-A041	1,100,000	2,600,000
M051-00B38-A042	1,200,000	2,700,000
M051-00B38-A043	1,300,000	2,800,000
M051-00B38-A044	1,400,000	2,900,000
M051-00B38-A045	1,600,000	3,100,000
M051-00B38-A046	1,700,000	3,200,000
M051-00B38-A047	1,800,000	3,300,000
M051-00B38-A048	1,900,000	3,400,000
M051-00B38-A049	2,000,000	3,500,000
M051-00B38-A050	2,100,000	3,600,000
M051-00B38-A051	2,200,000	3,700,000
M051-00B38-A052	2,300,000	3,800,000
M051-00B38-A053	2,400,000	3,900,000
M051-00B38-A054	2,600,000	4,100,000
M051-00B38-A055	2,700,000	4,200,000
M051-00B38-A056	2,800,000	4,300,000
M051-00B38-A057	2,900,000	4,400,000
M051-00B38-A058	3,000,000	4,500,000

EXTRA BALL

M051-00B38-A072	1,500,000	3,200,000
M051-00B38-A073	1,800,000	3,500,000
M051-00B38-A075	2,600,000	5,500,000
M051-00B38-A076	2,900,000	5,800,000
M051-00B38-A077	3,100,000	6,000,000

CARDS:
NOVELTY: M051-00B38-A032
M051-00B38-A038
M051-00B38-A037

IX. TROUBLESHOOTING ON LOCATION

1A)
SYMPTOM:
Game does not play power-up tune when power is turned on. General illumination is present.

ACTION:
A) Turn power OFF. Open back box. Locate light emitting diode (LED) on Control Board.
B) Turn power ON. LED must flash 8X to indicate that the module is good. Correct sequence is flash-pause-flash and then six more flashes and LED goes out.
C) If LED does not come on, or does not flash, or flashes, but less than 8X, turn off power. Check fuses. If fuses are good, replace Control Board.

CAUTION: Replacement Control Board must have same Part Number or incorrect operation will result! See Parts List for Control Board.

Turn power ON.

D) If game is correct, it is now ready for play. If game is not correct, contact the Bally-Midway service department.

2A)
SYMPTOM:
Not all feature lamps light during play.

ACTION:
A) With power ON, open front door. Enter '90' on keyboard. If game is correct **all** feature lamps flash ON and OFF.
B) Carefully raise playfield or open back box to gain access to lamps.
C) Replace bulbs that do not flash.
D) If game is correct, it is now ready for play.
E) If game is not correct, turn power OFF. Replace Control Board. Turn power ON and repeat A.
F) If game is correct, it is now ready for play.* If game is not correct, contact the Bally-Midway service department.

2B)
SYMPTOM:
One or some switched lamps always ON.

ACTION:
Repeat 2AA, AN, AE, and AF.

3A)
SYMPTOM:
Display digits improper on **one** or **several**, but less than all Display Driver Module(s). Improper: One or several segments always OFF, digits mottled or several segments or digit(s) always ON.

*Turn power ON-OFF switch OFF and then ON.

ACTION:
A) With power ON, open front door. Enter '91' on keyboard. If the game is correct, each digit on each Display Driver Module (5 used/game) displays the count 0 - 9 continuously in all 7 digit positions. Note defective Display Driver modules.
B) Turn power OFF.

WARNING: High Voltage is supplied to the Display Driver Modules, from the Power Module. Wait 30 seconds for High Voltage to Bleed Off.

C) Replace Display Driver module(s). Turn power ON. Repeat A.
D) If game is correct, it is now ready for play.* If game is not correct contact Bally-Midway service department.

3B)
SYMPTOM:
All displays improper (all five Display Driver Modules). Improper: Digit(s) always on or off/ segment(s) always on or off, all displays.

ACTION:
A) Repeat 3AA, and AB.
B) Replace Control Board. See CAUTION NOTE, 1C. Turn power ON. Repeat A.
C) If game is correct, it is now ready to play.* If game is not correct, contact the Bally-Midway service department.

3C)
SYMPTOM:
One or several displays always off.

ACTION:
A) Do 3AA, AB, AC, and AD.
B) Repeat 3BB and BC, if necessary

4A)
SYMPTOM:
Solenoid(s) do(es) not pull-in during course of game.

ACTION:
A) With power ON, open front door. Enter '92' on keyboard.
B) If game was correct, each solenoid would be energized. A number is flashed on the Player Score displays as each solenoid is pulsed. Note any numbers that do not have the sound of an associated solenoid. (**NOTE:** If most of the Playfield Solenoids DO NOT operate, check the Playfield Fuse to see if it is blown. It is generally found near the Flipper Assemblies.) See Solenoid Identification Table on page 1-18.

C) Carefully lift the playfield (or open the back box) to gain access to the solenoid. Turn power OFF. Inspect the solenoid.
D) If a lead is broken off, repair. Repeat A & B. If game is correct, it is now ready for play.* If solenoid wiring was correct, turn power OFF.
E) Replace Control Board. See CAUTION NOTE.
F) Repeat AA & AB. If game is correct, it is now ready to play.* If game is not correct, turn power OFF.
G) Replace Sound Module A8.
H) Repeat AA & AB if game is correct. It is now ready to play. If game is not correct, turn power OFF.
I) Replace Control Board. See CAUTION NOTE, 1C.
J) Repeat A & B. If game is correct, it is now ready to play.* If game is not correct contact the Bally-Midway service department.

4B)
SYMPTOM:
Solenoid(s) always energized. **NOTE:** If impulse solenoids (ball ejects, slingshots, thumper-bumpers, etc.) are energized continuously, they are subject to damage. Limit troubleshooting to one minute with power ON, followed by **five minutes with power OFF.** Repeat as necessary. Replace damaged solenoids. (**NOTE:** When troubleshooting Playfield Solenoid Circuits, be advised that a constantly energized Solenoid (i.e. Thumper-Bumper) will blow the Playfield Fuse in a few seconds. To avoid replacing the Fuse repeatedly, try to isolate the faulty Solenoid Circuit as soon as the game power switch is flipped ON.)

ACTION:
Do 4AA, AB, AE, & AF.

5A)
SYMPTON:
No sound.

ACTION:
A) With power ON, open front door. Enter '93' on keyboard.
B) Turn volume control clockwise to Max.
C) If correct, sound will be heard. If incorrect, try seating speaker lead connector (J2) and input connector (J1).
D) If correct, sound will be heard. If incorrect, contact the Bally-Midway service department.

6A)
SYMPTOM:
Feature (Drop Targets, etc.) does not score.

ACTION:
A) With power ON, open front door. Enter '94' on keyboard.
B) If the game is correct, Match/Bill in Play display would flash '94' and the Player Score displays flash '0'. If a number other than '0' appears on the Player Score displays, see SWITCH ASSEMBLY IDENTIFICATION TABLE on page 1-18.
C) Carefully lift the playfield. Locate the switch asembly identified from the number. Visually inspect the switch assembly. If the contacts are stuck, re-gap them to 1/16". See section under SWTICH ASSEMBLY ADJUSTMENTS On page 1-20. Repeat A & B. If the game is correct, it is now ready to play.* If game is not correct, turn power OFF.
D) Replace Control Board. See CAUTION NOTE, 1C.
E) Repeat A & B. If game is correct, it is now ready to play.* If game is not correct, contact the Bally-Midway service department.

EIGHT BALL CHAMP

SOLENOID IDENTIFICATION TABLE

SELF TEST #	SOLENOID IDENTIFICATION	SELF TEST #	SOLENOID IDENTIFICATION
01	Saucer	08	Drop Target 7,15
02	Left Thumper Bumper	09	Right Slingshot
03	Right Thumper Bumper	10	Left Slingshot
04	Drop Target 1,2,9,10	11	Outhole
05	Drop Target 3,11	12	Knocker
06	Drop Target 4,5,12,13	13	K1 Relay (Flipper Enable)
07	Drop Target 6,14		

SWITCH ASSEMBLY IDENTIFICATION TABLE

Switch Self Test #	DESCRIPTION	Switch Self Test #	DESCRIPTION
01	Right Thumper Bumper	20	"M" Top Lane
02	Left Thumper Bumper	21	"P" Return Lane
03	Right Slingshot	22	Not Used
04	Left Slingshot	23	Left Outlane
05	Saucer	24	Right Outlane
06	Credit	25	Drop Target 1,2,9,10
07	Rebound	26	Spinner
08	Outhole	27	Drop Target 3,11
09	Coin III (Right)	28	Drop Target 4,5,12,13
10	Coin I (Left)	29	Center Rollover Button
11	Coin II (Middle)	30	Drop Target 6,14
12	Left Rollover Button	31	Drop Target 7,15
13	Right Rollover Button	32	Lane Change (Cabinet)
14	Not Used	33	Drop Target "E"
15	Tilt	34	Drop Target "I"
16	Slam	35	Drop Target "G"
17	"C" Return Lane	36	Drop Target "H"
18	"H" Top Lane	37	Drop Target "T"
19	"A" Top Lane		

#OB42 8-BALL CHAMP

○ **INDICATES SWITCH ASSEMBLY IDENTIFICATION NUMBERS**
NOTE: CABINET: O6, 15, 16, 32
DOOR: 09, 10, 11

□ **INDICATES SOLENOID IDENTIFICATION NUMBERS**
NOTE: BACKBOX: 13
CABINET: 12

VECTOR SHOWING FOR EJECT SAUCER

BALL SHOULD EXIT AS SHOWN

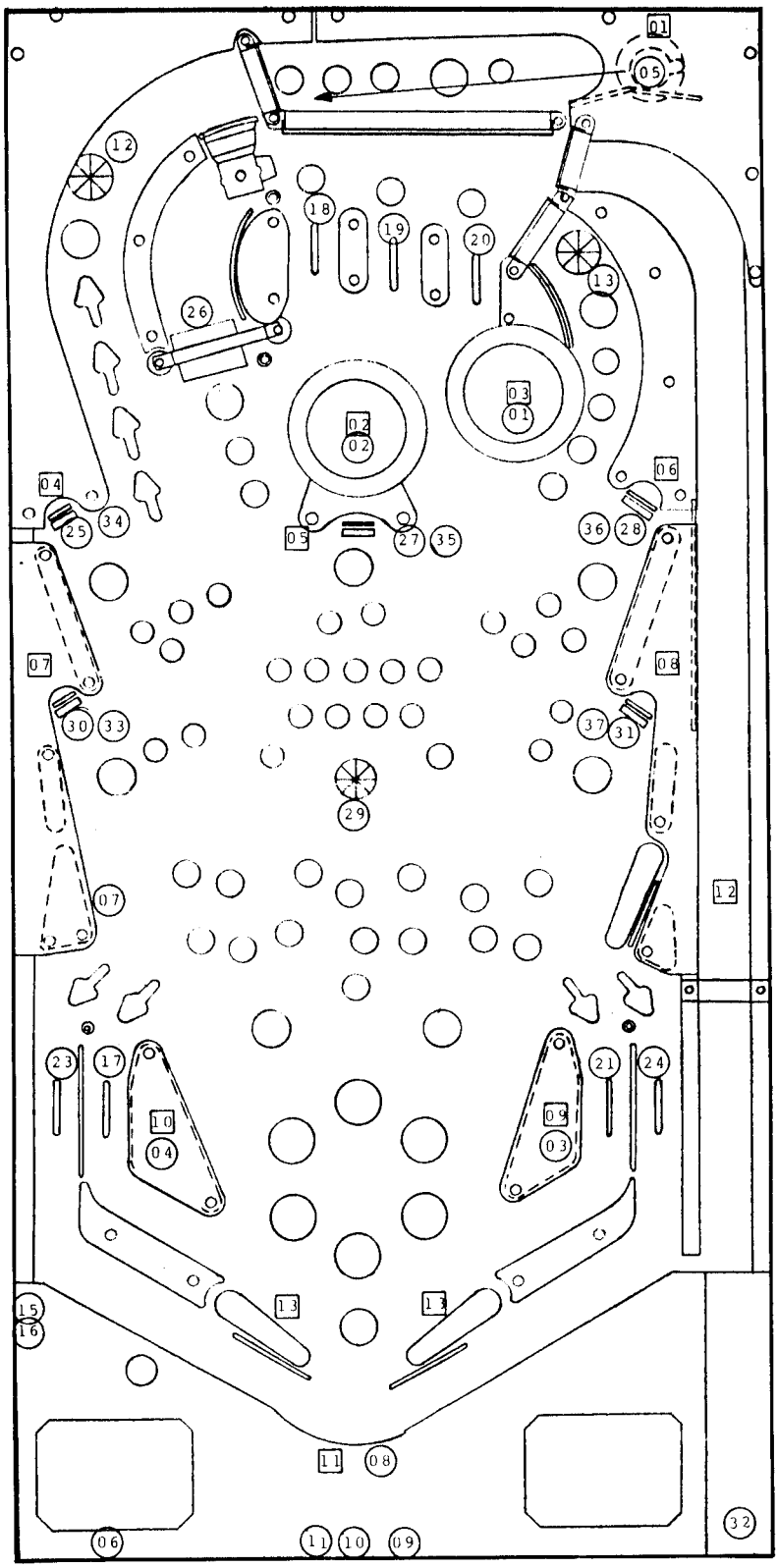

FIGURE I

X. ROUTINE MAINTENANCE ON LOCATION:

After successful completion of the Self Diagnostic Test Procedure, set the game up for play. Exercise each roll-over, thumper bumper, slingshot, etc., by hand until each switch assembly on the playfield has been checked for proper operation. If actuating a switch assemble results in intermittent or no response, clean contacts by gently closing them on a clean business card or piece of paper and wiping until they wipe clean. Re-gap, if necessary, to 1/16". Do not burnish or file Gold Plated Switch Contacts.

XI. SWITCH ASSEMBLY ADJUSTMENTS:

GENERAL:

All switch assemblies consist of leaf springs,contacts, separators, plastic tubing and screws to hold them to the mounting surface. Before attempting to adjust a switch assembly, make sure that these screws are tight. If not, tighten screw closest to the contact end of the leaf spring first. This will prevent the assembly from being secured in such a manner that the leaf springs tend to fan out. In general, all leaf springs are adjusted for a 1/16" gap in the open position and .010" over-travel or wipe in the closed position. All contact should be in good condition. Unless otherwise instructed, they should be dry or non-lubricated. All contacts should be free of dust and dirt. Contacts, with the exception of the flipper button switch assemblies are plated to resist corrosion. Filing or burnishing breaks the finish and encourages corrosion. Clean by closing the contacts over a clean piece of paper (e.g. a lint free business card) and wiping gently until the contacts are clean. For the flipper button switch assemblies **ONLY**: Tarnish can be removed with a contact file followed by burnishing tool. Severely pitted contacts must be placed and adjusted only when they are found to be a source of game malfunction.

XII. SERVICE HINTS:

The Bally playfield has an improved tuff-coat finish with excellent wearing properties. Life expectancy of the playfield as well as play appeal, can be extended by periodic cleaning.

DO: Bally recommends you clean your playfield with Wildcat #125 (Wildcat Chemical Co. 1349 East Seminary Drive; Fort Worth, Texas 76115; Phone 1-817/924-8321). Wildcat #125 is a combination cleaner and polish. Bally has tried and tested this product and found it to be very effective. If Wildcat #125 is not available, Bally suggests you ask your distributor to order it. Inspect and hand polish the ball in a clean cloth. A chipped ball must be replaced. It can ruin the finish on the playfield in a short period of time.

DON'T: Use water in large quantities, highly caustic cleaners, abrasive cleaners and cleaning pads on the playfield, or allow a wax or polish build up. Waxes yellow with age and spoil appeal.

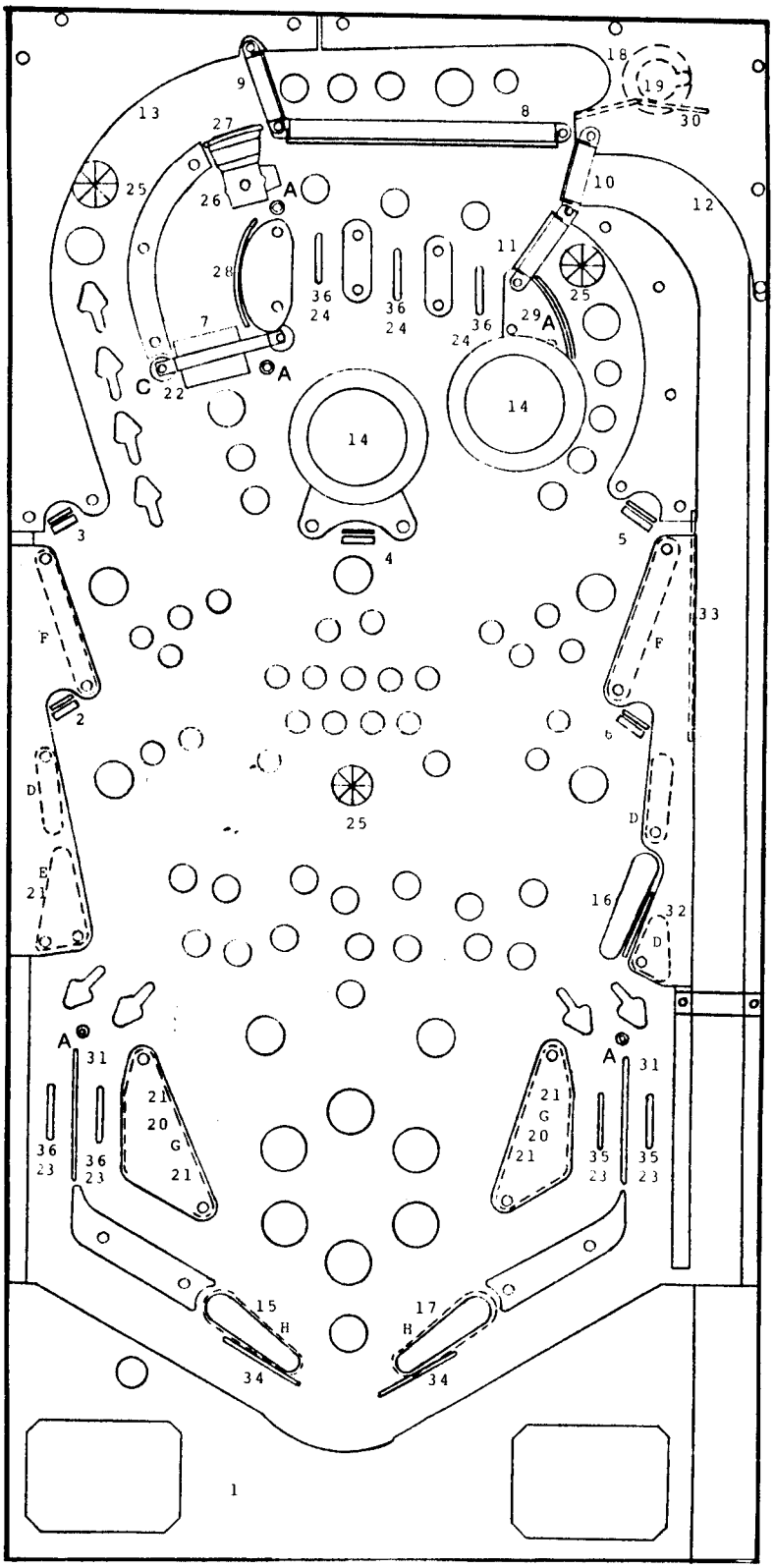

FIGURE II

OB38 8-BALL CHAMP
RUBBER PARTS

A.	17-41-633	(5) POST
B.	17-41-637	(19) POST
C.	17-41-641	(1) POST
D.	17-41-643	(3) I.D. 1"
E.	17-41-644	(1) I.D. 1-1/2"
F.	17-41-645	(2) I.D. 2"
G.	17-41-646	(2) I.D. 2-1/2"
H.	17-41-682	(3) FLIPPER RED

PANEL TOP PARTS

1.	BOTTOM ARCH ASSY.	AB38-00025-0000
2.	DROP TARGET ASSY.- L.H. SINGLE (E)	AB38-00023-0100
3.	DROP TARGET ASSY.- L.H. SINGLE (I)	AB38-00023-0200
4.	DROP TARGET ASSY.- L.H. SINGLE (G)	AB38-00023-0300
5.	DROP TARGET ASSY.- L.H. SINGLE (H)	AB38-00023-0400
6.	DROP TARGET ASSY.- L.H. SINGLE (T)	AB38-00023-0500
7.	SPINNER & GATE ASSY.	AB38-00014-0000
8.	BALL GATE & WIRE ASSY.	AB38-00021-0000
9.	BALL GATE & WIRE ASSY.	AB38-00033-0000
10.	BALL GATE & WIRE ASSY.	A391-00030-0000
11.	BALL GATE & WIRE ASSY.	A967-00058-0000
12.	BALL GUIDE ASSY.	AB38-00017-0000
13.	BALL GUIDE ASSY.	AB38-00022-0000
14.	THUMPER BUMPER ASSY.	A967-00053-0000
15.	FLIPPER ASSY. (LEFT)	A365-00069-0200
16.	FLIPPER ASSY. (MIDDLE RIGHT)	A365-00069-0100
17.	FLIPPER ASSY. (RIGHT)	A365-00070-0100
18.	SAUCER ASSY.	AA44-00034-0000
19.	SAUCER SWITCH ASSY.	A365-00036-0000
20.	SLINGSHOT ASSY.	A967-00059-0000
21.	SLINGSHOT & PT. SWITCH	A360-00239-0000
22.	SPINNER SWITCH ASSY.	A360-00245-0000
23.	SWITCH ASSY. WITH DIODE	A967-00067-0000
24.	SWITCH ASSY. WITH DIODE & CAPACITOR	AB38-00026-0000
25.	ROLLOVER BUTTON SWITCH	AB38-00028-0000
26.	BALL GATE ASSY.	A360-00022-0000
27.	BALL GUIDE WIRE	0B38-00902-0000
28.	BALL GUIDE WIRE	0B38-00903-0000
29.	BALL GUIDE WIRE	0B38-00904-0000
30.	BALL GUIDE WIRE	0B38-00905-0000
31.	BALL GUIDE WIRE 3-3/8	0360-00175-1800
32.	BALL GUIDE WIRE 2	0360-00175-5600
33.	BALL GUIDE WIRE 6-1/16	0360-00175-0107
34.	BUFFER WIRE	0360-00175-5300
35.	WIRE ACTUATOR ASSY.	A360-00216-0000
36.	WIRE ACTUATOR ASSY.	A331-00042-0000

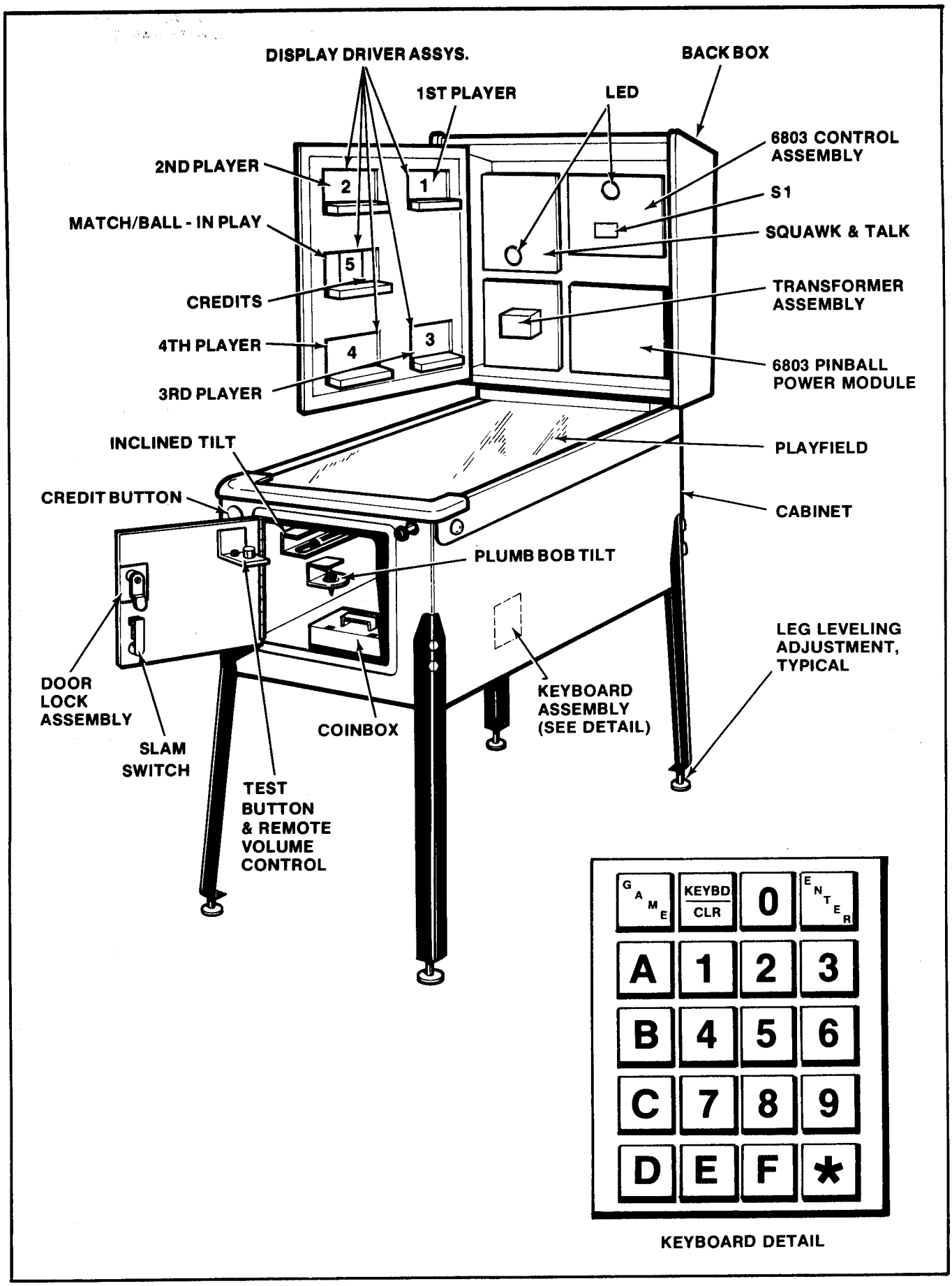

FIGURE III. ELECTRONIC PIN BALL MACHINE

XIII. ABBREVIATED PARTS LIST
EIGHT BALL CHAMP

MISCELLANEOUS	MIDWAY PART NUMBER	BALLY PART NUMBER
Transformer (Domestic or Export)	MT00-00141-000	
Bulbs, #555	0017-00003-0501	
Lamp Socket w/Diode (IN4004)	0017-00031-0052	E-120-198
Lamp Socket w/Diode (IN4004)	0017-00031-0053	E-120-200
Lamp Socket w/Diode (IN4004)	0017-00031-0054	E-120-201
Lamp Socket w/o Diode	0017-00031-0055	E-120-186
Lamp Socket w/o Diode	0017-00031-0056	E-120-188
Lamp Socket w/o Diode	0017-00031-0058	E-120-210
Fuse, 1 Amp. 3 AG Slow Blow (Playfield Solenoid Protection)	0017-00003-0103	E-133-44
Fuse, 3A, 3 AG Slow Blow	0017-00003-0007	
Fuse, 6A, 3 AG	0017-00003-0008	
Front Molding Assy.	A360-00086-0000	A-3080-14
Keypad Assy.	A365-00074-0000	
Back Glass	0A42-00914-00XF	
Ball Shooter Rod & Spring Assy. (Cabinet)	A360-00280-0000	ASE-2378-5
Plumb-Bob: Tilt	0360-00900-0000	E-138-3
Keyhook: Door	0017-00009-0019	
Credit Pushbutton - Red/White (Cabinet)	0017-00042-0684	
Overlay - Start Button (Cabinet)	0365-00121-0000	
Pushbutton - Orange (Cabinet) (2)	0151-00804-0011	
Back-Box: Hinged Front	0365-00517-0400	
Playfield Support	0360-00114-00XF	P-1455-1
Allen Wrench: 1/8"	0017-00009-0551	M-1718-7
Ball: 1-1/16" Dia. Steel	0017-00009-0546	M-168-26
Ball: 15/16" Dia. Steel	0017-00009-0547	M-168-50

ASSEMBLY SWITCHES		
Roll-over Button (3)	A360-00059-0000	ASW-A1-152
Saucer	A967-00075-0000	ASW-A1-209
Credit Button (Cabinet)	A365-00060-0100	
Ball Return	0017-00005-0183	
Coin (2) (Door)	0017-00005-0195	
Lane Change (Cabinet)	A370-00078-0000	ASW-A1-56
Rebound	A360-00069-0000	ASW-A1-47
Right Sling Shot (2)	A360-00069-0000	ASW-A1-47
Left Sling Shot (2)	A360-00069-0000	ASW-A1-47
Thumper Bumper - Make (2)	A967-00074-0000	ASW-A1-195
Tilt (Cabinet)	A360-00054-0000	ASW-A0-13
Slam (Cabinet)	A360-00076-0000	ASW-A2-73
Tilt (Door)	A090-00038-0000	
Right Lanes (Out Lane & Ball Lane) (2)	A360-00069-0000	ASW-A1-47
Left Lanes (Out Lane & Ball Lane) (2)	A360-00069-0000	ASW-A1-47
Flipper - Double Sw. - Make	A365-00046-0000	
Flipper - Double Sw. - Break	A365-00045-0000	
Flipper - Break (2)	A365-00045-0000	
Flipper - Make (2) (Cabinet)	A360-00071-0000	ASW-A1-61
Back-Up Target ("E", "I", "G", "H", & "T") (5)	AB38-00020-0000	
Left Hand Single Drop Target (5)	A360-00062-0000	ASW-A1-168
Spinner	A360-00058-0000	ASW-A1-151
Top Roll-over Lanes (3)	A360-00065-0000	ASW-A1-152

XIII. ABBREVIATED PARTS LIST (cont'd)
EIGHT BALL CHAMP

	MIDWAY PART NUMBER	BALLY PART NUMBER
ASSEMBLY COILS		
Flipper (3)	A360-00045-0000	AQ-25-500/ 34-4500
Knocker	A360-00046-0000	AR-26-1200
Outhole Kicker	A360-00044-0000	AN-26-1200
Thumper Bumper (2)	A360-00044-0000	AN-26-1200
Saucer	A360-00211-0000	A0-27-1300
Sling Shot (2)	A967-00046-0000	A0-26-1200
Drop Target (5)	AB38-00018-0000	
PLAYFIELD PARTS	**See Figure II**	
Playfield Glass	0360-00921-0000	G-409
Playfield & Inserts	AB38-00501-00XF	
Roll-over Button - White (3)	0017-00042-0405	C-900
Button: Roll-over Mounting - Green (2)	0017-00042-0541	C-901-4
Button: Roll-over Mounting - Amber	0017-00042-0544	C-901-8
Playfield Mylar	0B38-00901-0000	
Screened Plastic Set	AB38-00012-00XF	
Post: L=1" Red Plastic (10)	0017-00042-0588	
Post: L=1-3/16" Red Plastic (26)	0017-00042-0596	
Acorn Nut: Nylon (19)	0017-00009-0302	M-1794-1
Thumper Bumper Cap & Tape Assembly (2)	AB38-00011-0000	
Collar-Thumper Bumper - Red (2)	0017-00042-0566	C-1018-1
Thumper Bumper Locking Ring (2)	0017-00042-0414	
Thumper Bumper Mylar (2)	0B38-00911-0000	
Flipper - White (3)	A967-00031-0000	A-3994-5
MODULES		
6803 Pinball Power Module w/Fuses	A084-91785-AB38	
Squawk & Talk	A084-91625-AB38	AS-2518-61
6-Digit Display Driver (1 used)	A084-91491-A000	AS-2518-21
7-Digit Display Driver (4 used)	A084-91617-A000	AS-2518-58
6803 Pinball Control Module	A084-91786-AB38	

MODULE COMPONENTS

SEE MODULE PARTS LIST

SECTION 2
Illustrated Parts Breakdown

SECTION 2 is....

MISSING!!

ARRGGGHHH!!

SECTION 3
Component Layouts, Schematics & Wiring Diagrams

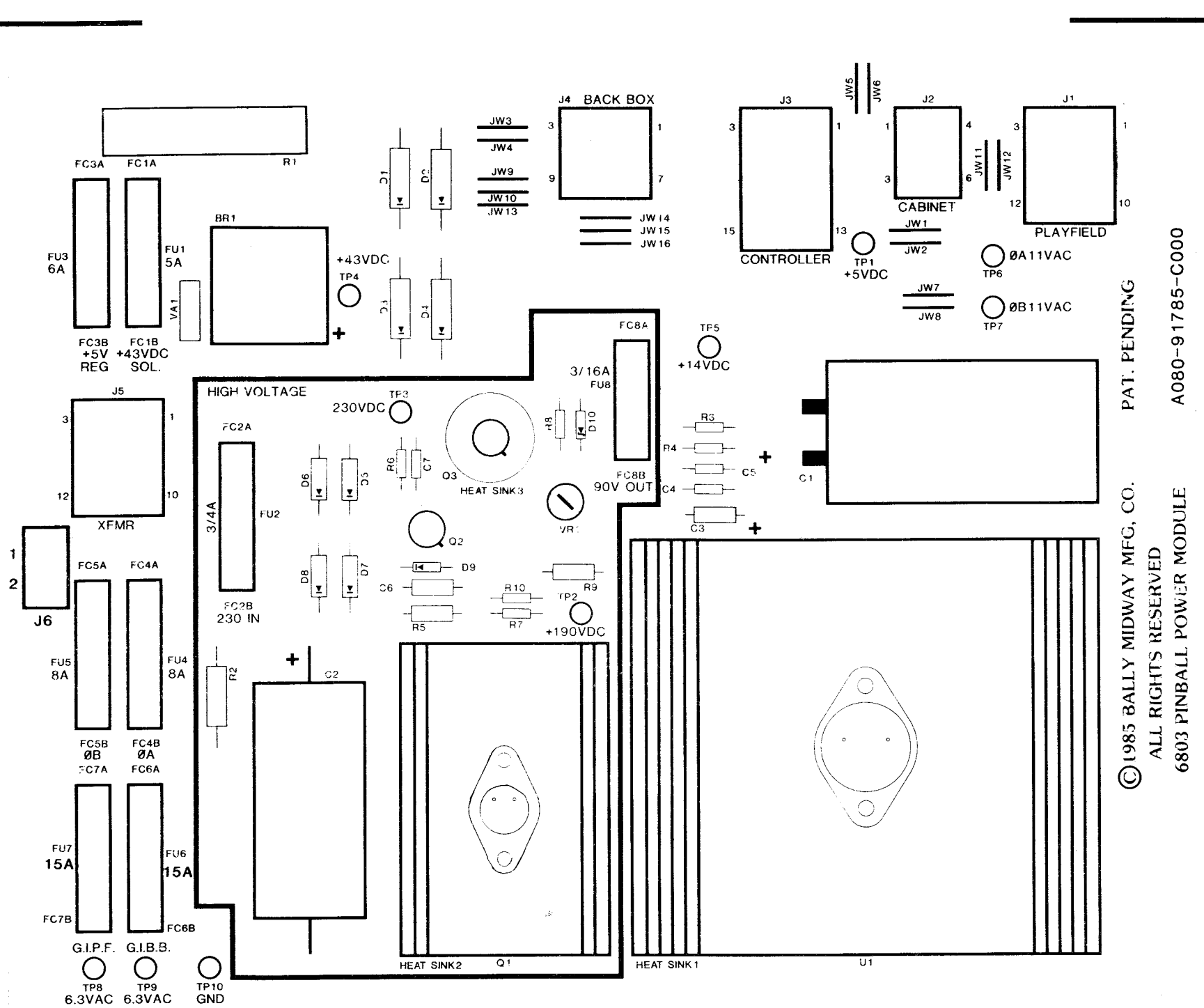

©1985 BALLY MIDWAY MFG. CO.
ALL RIGHTS RESERVED

PAT. PENDING

6803 PINBALL POWER MODULE

A080-91785-C000

6803 PINBALL POWER MODULE
A084-91785-C000
M051-00C53-C001

DESIGNATION LIST

DESIGNATION	DESCRIPTION
C1	11,000uf 20V ELEC.
P/O C1	TY-WRAP
P/O C1	SOLDER LUG
P/O C1	WIRE 20AWG
C2	160uf 350V ELEC.
P/O C2	TY-WRAP
C3	2uf 25V ELEC.
C4, C5	.1uf 25V CER.
C6, C7	.01uf 500V CER.
R1	600 OHM 10W
R2	100K 1/4W 5%
R3	2.2 OHM 1/4W 5%
R4	100 OHM 1/2W 5%
R5	22K 1/2W 5%
R6	100K 1W 5%
R7	390 OHM 1/4W 5%
R8	1.2K 1/4W 5%
R9	82K 1/2W 5%
R10	8.2K 1/4W 5%
VR1	0 - 25K 1/4W POT.
D1 - D4	MR751
D5 - D9	IN4004
D10	IN5275A ZENER
BR1	KBPC-35-02-W
P/O BR1	BRIDGE SPACER
Q1	2N3584
P/O Q1	SHIELD
P/O Q1	HEX SPACER
P/O Q1	6-32 X 5 SCREW
P/O Q1	6-32 X 12 SCREW
P/O Q1	LOCKWASHER EXT.
P/O Q1	LOCKWASHER INT.
P/O Q1	FLAT WASHER
P/O Q1	6-32 HEX NUT
P/O Q1	LABEL - CAUTION HIGH VOLT.
P/O Q1	HEATSINK 2
P/O Q1	INSULATOR TO-66
Q2, Q3	2N3440
P/O Q2, Q3	INSULATOR TO-5
P/O Q3	HEATSINK 3
U1	78H05C REG.
P/O U1	6-32 X 12 SCREW
P/O U1	6-32 HEX NUT
P/O U1	LOCKWASHER EXT.
P/O U1	FLAT WASHER
P/O U1	HEATSINK 1
P/O U1	INSULATOR TO-3
VA1	VARISTOR

DESIGNATION LIST

DESIGNATION	DESCRIPTION
JW1 - JW16	ZERO OHM RES. JUMPER
TP1 - TP10	TEST POINTS
F1*	5 AMP 3AG FUSE
F2	3/4 AMP 3AG FUSE
F3	6 AMP 3AG FUSE
F4, F5	8 AMP 3AG FUSE
F6, F7	15 AMP 3AG FUSE
F8	3/16 AMP 8AG FUSE
FC1A - FC3B, FC8A, FC8B	FUSE CLIPS
FC4A - FC7B	FUSE CLIPS
J1	12 PIN M-N-L CONN. FEMALE
J2	6 PIN M-N-L CONN. MALE
J3	15 PIN M-N-L CONN. MALE
J4	9 PIN M-N-L CONN. MALE
J5	12 PIN M-N-L CONN. MALE
J6	2 PIN M-N-L CONN. MALE
6803 POWER MOD.	P.C. BOARD

*** TWO FLIPPER GAMES ONLY - SEE SCHEMATIC**

6803 PINBALL POWER MODULE
A084-91785-C000
M051-00C53-C001

CROSS REFERENCE LIST

DESCRIPTION	QTY.	DESIGNATION NO.	PART NOS.
.01UF 500V CER.	2	C6,C7	0360-00800-0013
.1UF 25V CER.	2	C4,C5	0360-00800-0026
2UF 25V ELEC.	1	C3	0360-00800-0019
160UF 350V ELEC.	1	C2	0360-00800-0020
11,000UF 20V ELEC.	1	C1	0360-00800-0024
2.2 OHM 1/4W 5%	1	R3	100E-00005-0003
100 OHM 1/2W 5%	1	R4	100E-00006-0021
390 OHM 1/4W 5%	1	R7	100E-00005-0049
600 OHM 10W 10%	1	R1	100E-00002-0049
1.2K 1/4W 5%	1	R8	100E-00005-0063
8.2K 1/4W 5%	1	R10	100E-00005-0086
22K 1/2W 5%	1	R5	100E-00006-0065
82K 1/2W 5%	1	R9	100E-00006-0072
100K 1/4W 5%	1	R6	100E-00005-0115
100K 1W 5%	1	R2	100E-00007-0037
0-25K 1/4W POT	1	VR1	0360-00804-0004
MR 751	4	D1-D4	103E-00003-0016
1N4004	5	D5-D9	103E-00003-0005
1N5275	1	D10	103E-00001-0027
KBPC-35-02-W	1	BR1	103E-00005-0005
2N3440	2	Q2,Q3	104E-00003-0002
2N3584	1	Q1	104E-00005-0002
78H05C REG	1	U1	0360-00803-0021
VARISTOR METAL OXIDE 60V	1	VA1	115E-00001-0002
TY-WRAP	4	P/O C1,C2	0017-00042-0048
ZERO OHM RES. JUMPER	16	JW1-JW16	117E-00001-0001
TEST POINTS	10	TP1-TP10	0017-00007-0131
SOLDER LUG	2	P/O C1	0017-00021-0257
JUMPER WIRE 20AWG	2	P/O C1	0017-00033-0448
INSULATOR TO-3	1	P/O U1	0017-00042-0119
INSULATOR TO-5	2	P/O Q2,Q3	0017-00042-0151
INSULATOR TO-66	1	P/O Q1	0017-00042-0158
HEX SPACER	2	P/O Q1	0017-00042-0248
SHIELD	1	P/O Q1	0365-00952-0000
HEATSINK 1	1	P/O U1	112E-00001-0003
HEATSINK 2	1	P/O Q1	112E-00001-0002
HEATSINK 3	1	P/O Q3	112E-00001-0004
BRIDGE SPACER	1	P/O BR1	118E-00001-0001
6-32 X 12 SCREW	4	P/O Q1,U1	0017-00101-0132
6-32 X 5 SCREW	2	P/O Q1	0017-00101-0555
6-32 HEX NUT	4	P/O Q1,U1	0017-00103-0005
LOCKWASHER INT.	4	P/O Q1,	0017-00104-0008
LOCKWASHER EXT.	4	P/O Q1,U1	0017-00104-0009
FLAT WASHER	4	P/O Q1,U1	0017-00104-0106
FUSE CLIP	8	FC1A-FC3B, FC8A,FC8B	0017-00071-0033
FUSE CLIP	8	FC4A-FC7A	0017-00071-0034
3/16 AMP 8AG FUSE	1	F8	0017-00003-0206
3/4 AMP 3AG FUSE	1	F2	0017-00003-0010
5 AMP 3AG FUSE	1	F1*	0017-00003-0175
6 AMP 3AG FUSE	1	F3	0017-00003-0008

CROSS REFERENCE LIST

DESCRIPTION	QTY.	DESIGNATION NO.	PART NOS.
8 AMP 3AG FUSE	2	F4,F5	0017-00003-0387
15 AMP 3AG FUSE	2	F6,F7	0017-00003-0011
12 PIN M-N-L CONN. FEMALE	1	J1	0017-00021-0532
6 PIN M-N-L CONN. MALE	1	J2	0017-00021-0424
15 PIN M-N-L CONN. MALE	1	J3	0017-00021-0434
9 PIN M-N-L CONN. MALE	1	J4	0017-00021-0425
12 PIN M-N-L CONN. MALE	1	J5	0017-00021-0426
2 PIN M-N-L CONN. MALE	1	J6	0017-00021-0488

* TWO FLIPPER GAMES ONLY - SEE SCHEMATIC

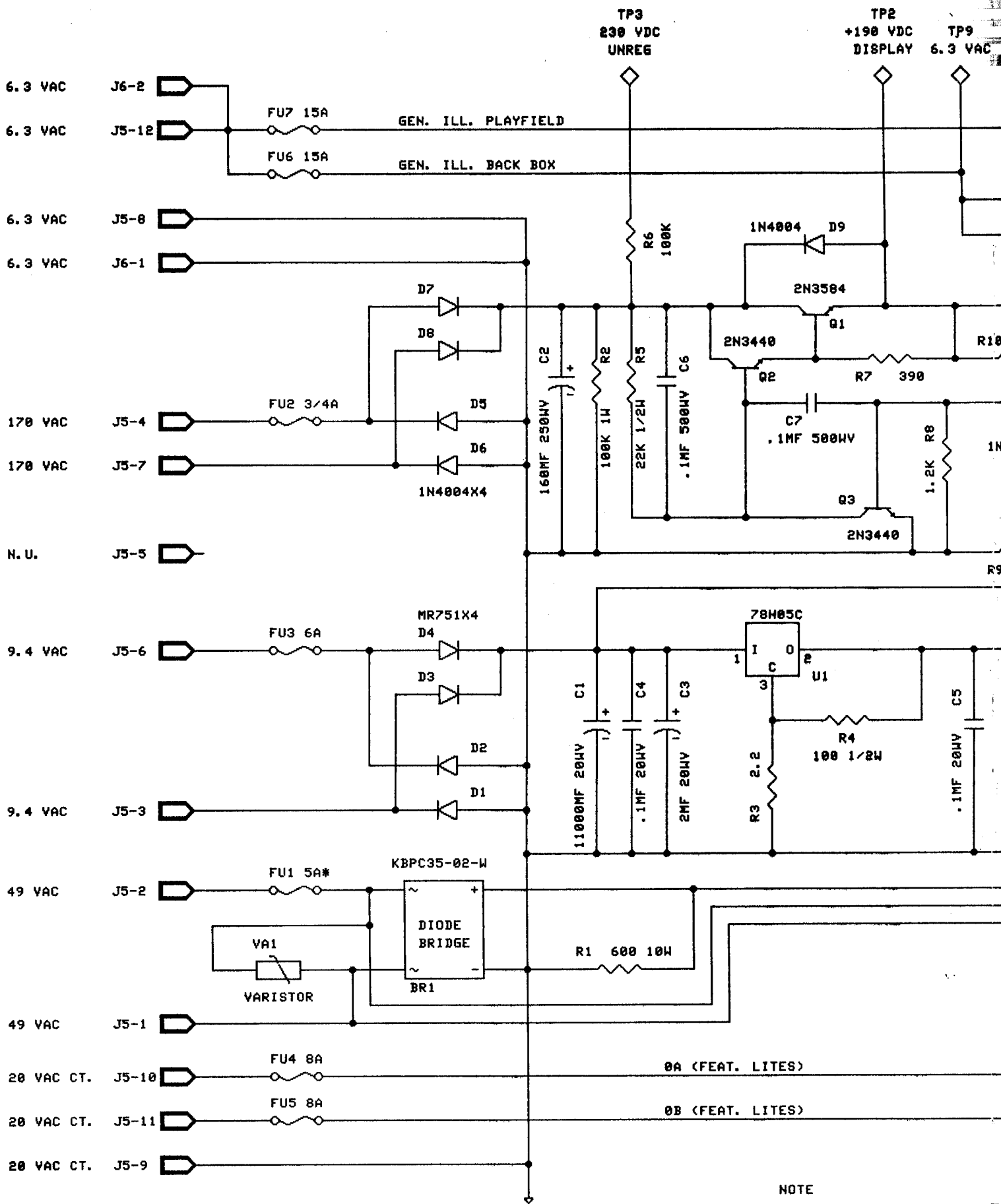
TP3
230 VDC
UNREG
TP2
+190 VDC
DISPLAY
TP9
6.3 VAC
6.3 VAC J6-2
6.3 VAC J5-12
FU7 15A
GEN. ILL. PLAYFIELD
FU6 15A
GEN. ILL. BACK BOX
6.3 VAC J5-8
6.3 VAC J6-1
R6 100K
1N4004 D9
2N3584
Q1
2N3440
Q2
R7 390
R10
D7
D8
C2 160MF 250WV
R2 100K 1W
R5 22K 1/2W
C6 .1MF 500WV
170 VAC J5-4
170 VAC J5-7
FU2 3/4A
D5
D6
1N4004X4
C7 .1MF 500WV
R8 1.2K
Q3
2N3440
N.U. J5-5
MR751X4
9.4 VAC J5-6
FU3 6A
D4
D3
D2
D1
9.4 VAC J5-3
78H05C
U1
C1 11000MF 20WV
C4 .1MF 20WV
C3 2MF 20WV
R3 2.2
R4 100 1/2W
C5 .1MF 20WV
KBPC35-02-W
49 VAC J5-2
FU1 5A*
DIODE BRIDGE
BR1
VA1
VARISTOR
R1 600 10W
49 VAC J5-1
20 VAC CT. J5-10
FU4 8A
0A (FEAT. LITES)
20 VAC CT. J5-11
FU5 8A
0B (FEAT. LITES)
20 VAC CT. J5-9
NOTE
* WHEN 3FLIPPERS ARE USE
WHEN 4FLIPPERS ARE USED

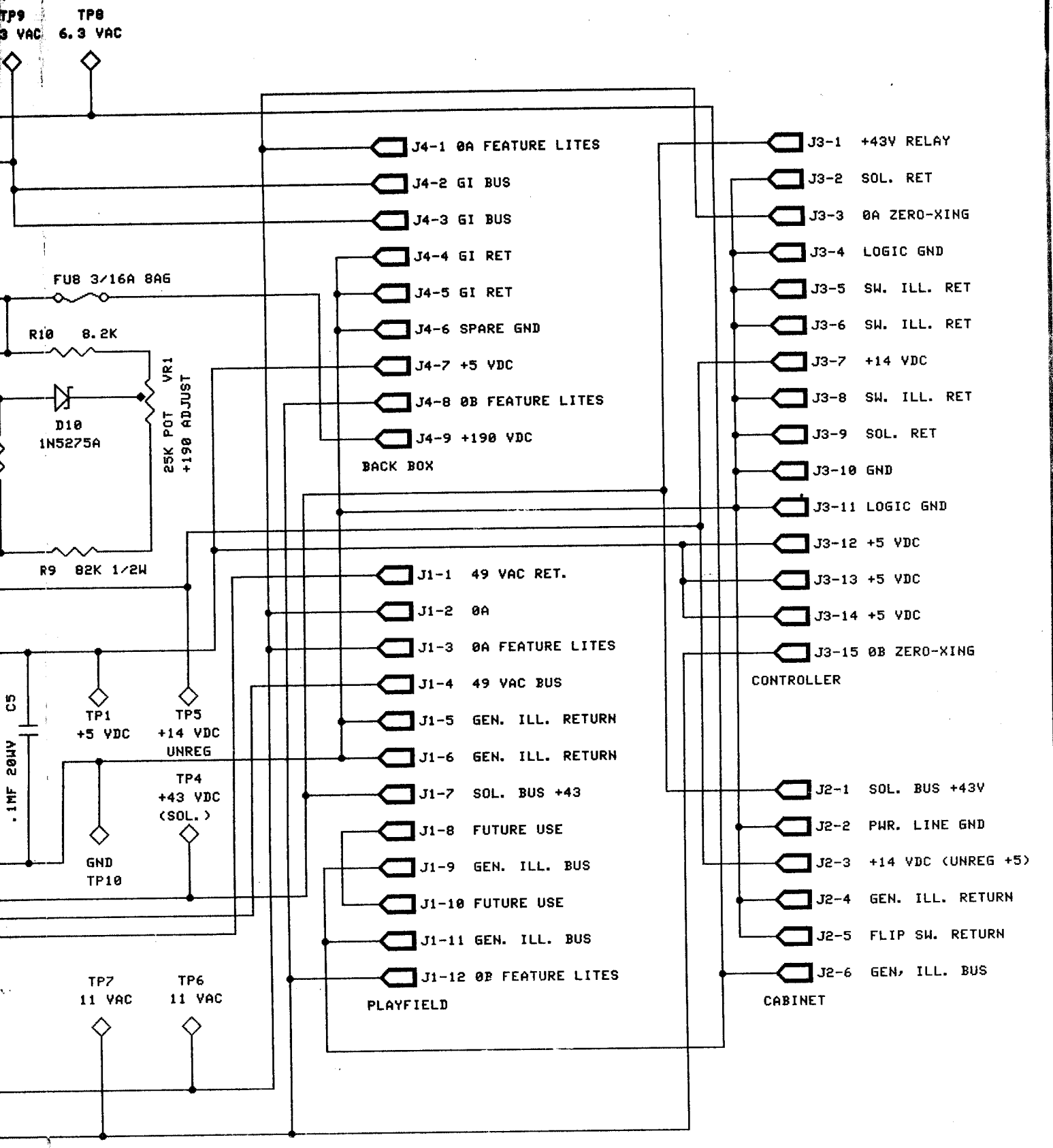

RE USED FU1 SHOULD BE 6AMP
USED FU1 SHOULD BE 7AMP

NOTES: A. AARSTAD	BALLY MIDWAY MFG. CO.	
1PER	6803 PINBALL PWR MODULE SCHEMATIC DRAWING A084-91785-C000 M051-00C53-C002	
06/19/85		
	SHEET 1 OF 1	REV

15 JUN 85 10:35 /USER/CHUN/AAAA 8.DRAW

6e/6-D

SQUAWK & TALK MODULE
AS 2518-61A

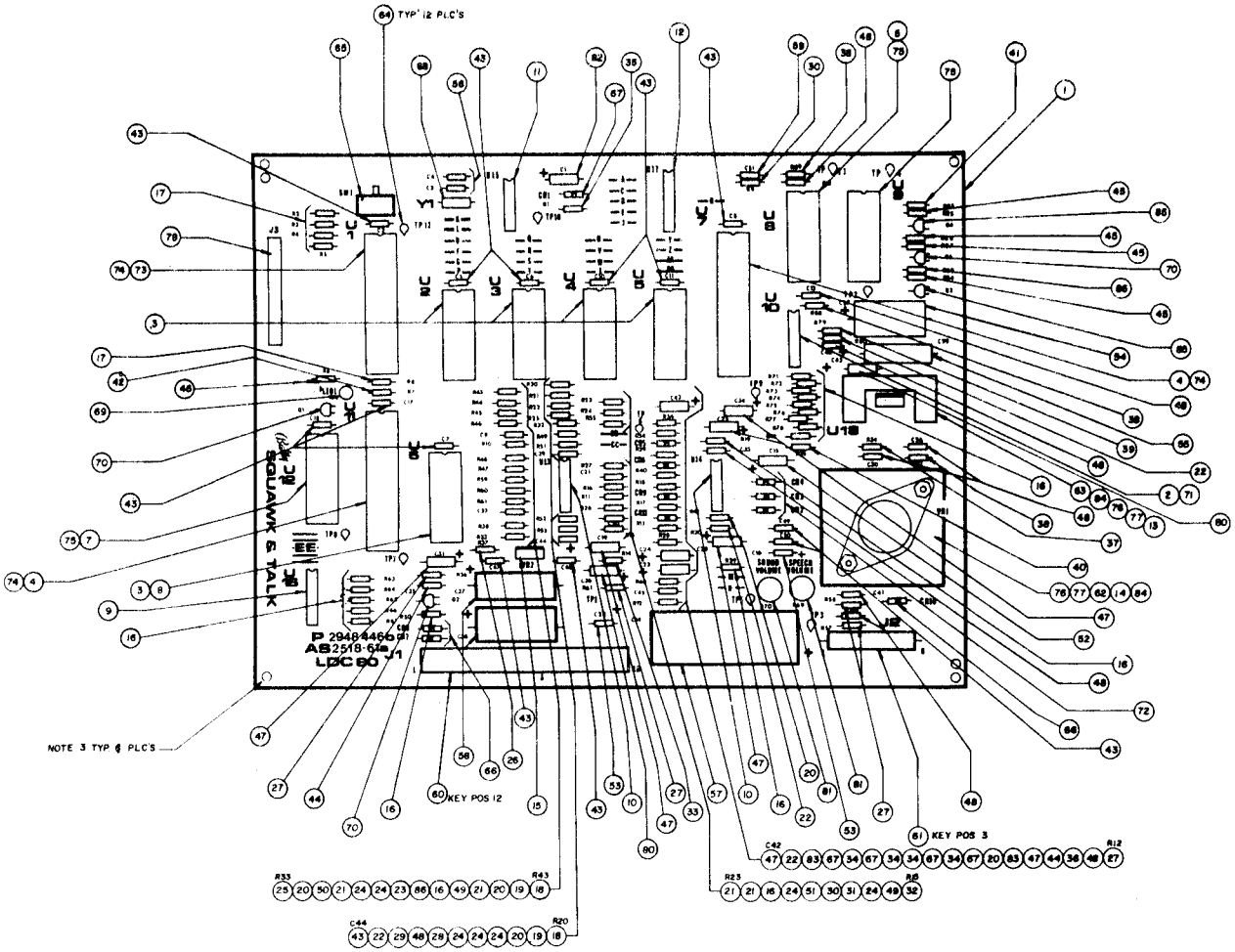

ITEM	QTY.	REFERENCE DESIGNATION	DESCRIPTION	BALLY PART #
1	1	PWB	M-645-577b	P-2948-446b
2	1	U10	AD 558 DAC	E-620-171
3	5	Used with U2 thru U6	24 Pin I.C. Socket	E-712
4	2	U7, U11	6821 P.I.A.	E-620-29
5	1	U8	Tms 5200 Speech	E-620-167
7	1	U12	AY3-8912 Sound	E-620-166
8	1	U6	6810 RAM (SEE NOTE 1)	E-620-30
9	1	U16	4049 Hex Inverter	E-620-33
10	2	U13, U14	LM 3900	E-620-126
11	1	U15	74LS14 Schmidt Inverter	E-620-169
12	1	U17	74LS155	E-620-168
13	1	U18	TDA 2002 Power Amp	E-620-127
14	1	VR1	LM323, 5V Regulator	E-710
15	1	VR2	7905, -5V Regulator	E-620-165
16	19	R10, 19, 29, 42, 50, 63-67, 71-78, 55	Resistor, ¼W, 10K	E-105-185
17	5	R2-5,8	Resistor, ¼W, 5%, 3.3K	E-105-238
18	2	R20, 43	Resistor, ¼W, 5%, 820K	E-105-343
19	2	R21, 44	Resistor, ¼W, 5%, 390K	E-105-310
20	5	R13, 22, 38, 41, 45	Resistor, ¼W, 200K	E-105-225
21	4	R23, 24, 46, 61	Resistor, ¼W, 5% 100K	E-105-226
22	4	R30, 53, 56, 80	Resistor, ¼W, 5% 2K	E-105-237
23	1	R47	Resistor, ¼W, 5%, 2.7K	E-105-151
24	7	R25, 26, 27, 32, 49, 59, 60	Resistor, ¼W, 5% 1m	E-105-285
25	1	R33	Resistor, ¼W, 5%, 91K	E-105-313

SQUAWK & TALK MODULE
AS 2518-61A

COMPONENTS PARTS LIST

ITEM	QTY.	REFERENCE DESIGNATION	DESCRIPTION	BALLY PART #
26	1	R37	Resistor, ¼W, 5%,30K	E-105-245
27	5	R12, 36, 57, 58, 81	Resistor, ¼W, 5%, 1K	E-105-230
28	1	R51	Resistor, ¼W, 5%, 750K	E-105-344
29	1	R52	Resistor, ¼W, 5%, 9.1K	E-105-228
30	2	R9, 16	Resistor, ¼W, 5%, 130K	E-105-203
31	1	R11	Resistor, ¼W, 5%, 150K	E-105-248
32	1	R15	Resistor, ¼W, 5%, 220K	E-105-161
33	1	R14	Resistor, ¼W, 5%, 1.8K	E-105-346
34	4	R17, 18, 39, 40	Resistor, ¼W, 5%, 910K	E-105-347
35	1	R1	Resistor, ¼W, 5%, 27K	E-105-243
36	1	R68	Resistor, ¼W, 5%, 510 Ω	E-105-311
37	1	R34	Resistor, ¼W, 5%, 2.2 Ω	E-105-211
38	3	R31, 88, 89	Resistor, ¼W, 5%, 220 Ω	E-105-303
39	1	R79	Resistor, ¼W, 5%, 7.5K	E-105-345
40	1	R35	Resistor, ¼W, 5%, 1 Ω	E-105-196
41	1	R83	Resistor, ¼W, 5%, 11K	E-105-360
42	1	R7	Resistor, ¼W, 5%, 8.2K	E-105-223
43	14	C2, 5-8, 10, 11, 17, 18, 44, 47-50	Capacitor, Ceramic, .01μF, 25V	E-586-85
44	2	C23, 35	Capacitor, Ceramic, .47μF, 16V	E-586-130
45	4	R84-87	Resistor, ¼W, 5%, 2.2K	E-105-287
46	1	R6	Resistor, ¼W, 470Ω	E-105-342
47	7	C19, 24, 25, 28, 31, 34, 42	Capacitor, Electrolytic, 1μF, 25V	E-586-90
48	10	C12, 13, 26, 30, 33, 39, 40, 41, 45, 46	Capacitor, Ceramic, .1μF, 25V	E-586-89
49	2	C9, 20	Capacitor, Ceramic, 470pF, 50V	E-586-83
50	1	C32	Capacitor, Ceramic, 68pF	E-586-120
51	1	C21	Capacitor, Ceramic, 100pF	E-586-68
52	1	C15	Capacitor, Electrolytic, 10μF, 16V	E-586-135
53	2	C16, 22	Capacitor, Tantalum, 4.7μF, 25V	E-586-73
54	1	C27	Capacitor, Electrolytic, 1000μF, 16V	E-586-136
55	1	C29	Capacitor, Electrolytic, 470μF, 6V	E-586-124
56	2	C3, 4	Capacitor, Ceramic, 27pF	E-586-121
57	1	C14	Capacitor, Electrolytic, 4700μF, 25V	E-586-123
58	2	C37, 38	Capacitor, Electrolytic, 330μF, 50V	E-586-147
59	1	C51	Capacitor, Monolythic, 10pF	E-586-150
60	1	J1	18 Pin Wafer Connector (156)	E-736-18
61	1	J2	6 Pin Wafer Connector (156)	E-736-6
62	1	Used with VR1	Heatsink, 6053B	E-682-11
63	1	Used with U18	Heatsink, 6030B	E-682-8
64	12		Test Points	P-5399
65	1	SW. 1	P.C.B. Switch	E-658-1
66	3	CR7, 8, 10	Diode (IN4004)	E-587-15
67	5	CR1, 5, 6, 9, 11	Diode (IN4148)	E-587-14
68	1	Y1	Crystal, 3.579	E-744-5
69	1	LED1	LED	E-679
70	3	Q1-2, 5	Transistor, 2N3904	E-585-31
71	1	Used with U10	Socket I.C. 16 Pin	E-712-16
72	3	CR2-4	Diode, VR332	E-587-22
73	1	U1	6808 or 6802 (SEE NOTE 1) Microprocessor	E-620-125 or 128
74	3	Used with U1, 7, 11	Socket, I.C. 40 Pin	E-712-1
75	3	Used with U8, 9, 12	Socket, I.C. 28 Pin	E-712-28
76	3	Used with U18, VR1	Screw	LSPR-00632-1106
77	3	Used with U18, VR1	Nut	N-00632-2112
78	2	J3	Header, 20 Pin	E-766-20
80	2	C36, 43	Capacitor, 2μF, 16V	E-586-63
81	2	R69, 70	Pot. 1K	E-599-16
82	1	C1	Capacitor, Electrolytic, 47μF	E-586-148
83	2	R28, 54	Resistor, 82K	E-105-341
84	AR	Used with U18, VR1	Thermal Compound	M-1834
85	2	Q3, 4	Transistor, 2N4403	E-585-23
86	2	R82, 48	Resistor, ¼W, 5%, 2.4K	E-105-312
			JUMPERS—SEE NOTES	

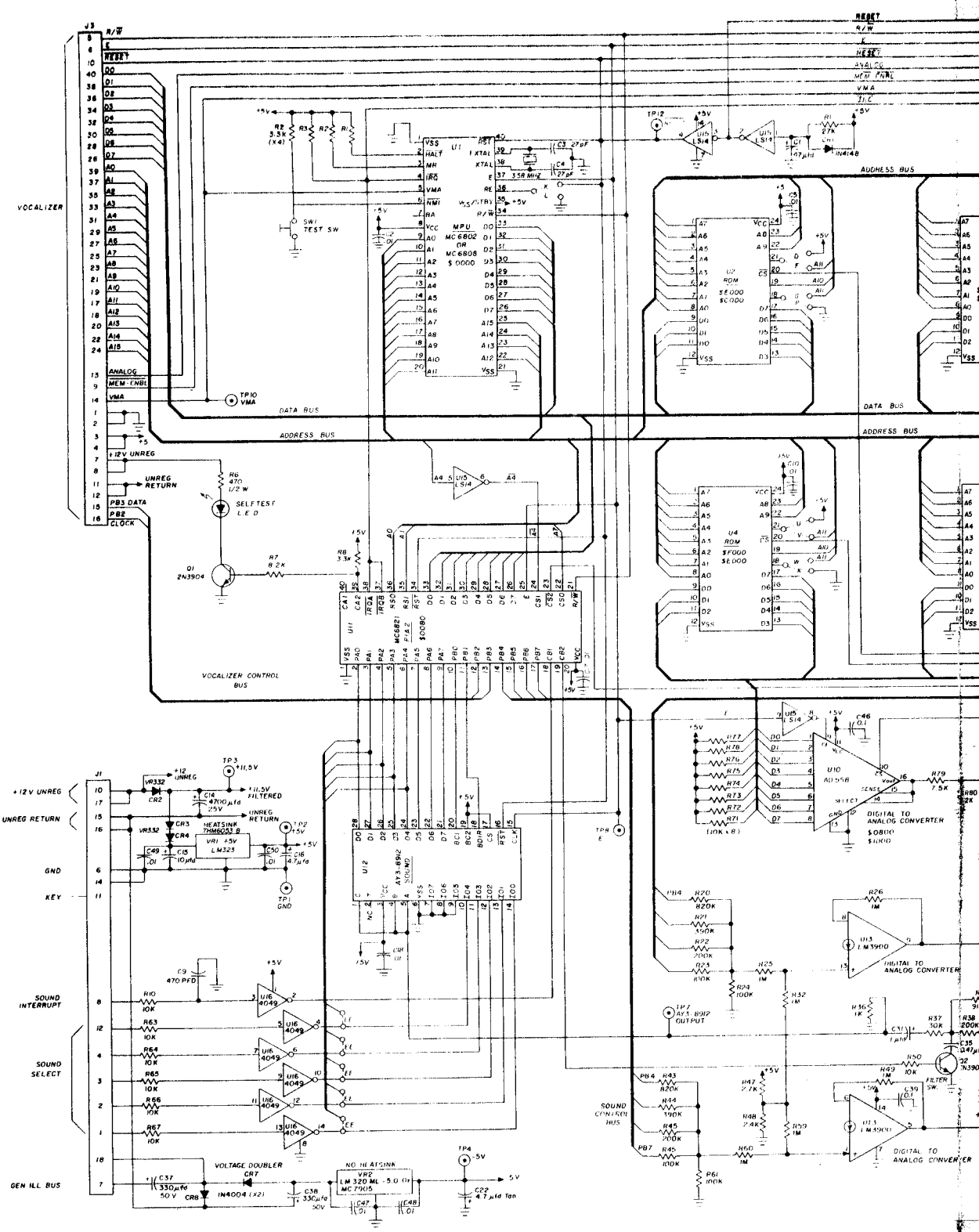

NOTES :

1. UNLESS OTHERWISE INDICATED ALL RESISTOR VALUES ARE IN OHMS.

LAST NUMBERS USED

R89
C51
CR10
U18
VR 2
Q5
TP12
EE

SQUAWK & TALK TEST POINTS

TP1 - GND
TP2 - +5VDC
TP3 - +11.5VDC
TP4 - -5VDC
TP5 - SPEECH VOLUME CONTROL VOLTAGE
TP6 - SOUND VOLUME CONTROL VOLTAGE
TP7 - AY3-8912 OUTPUT
TP8 - E PULSE
TP9 - TMS 5200 OUTPUT
TP10 - VMA
TP11 - TMS 5200 CLOCK
TP12 - RESET

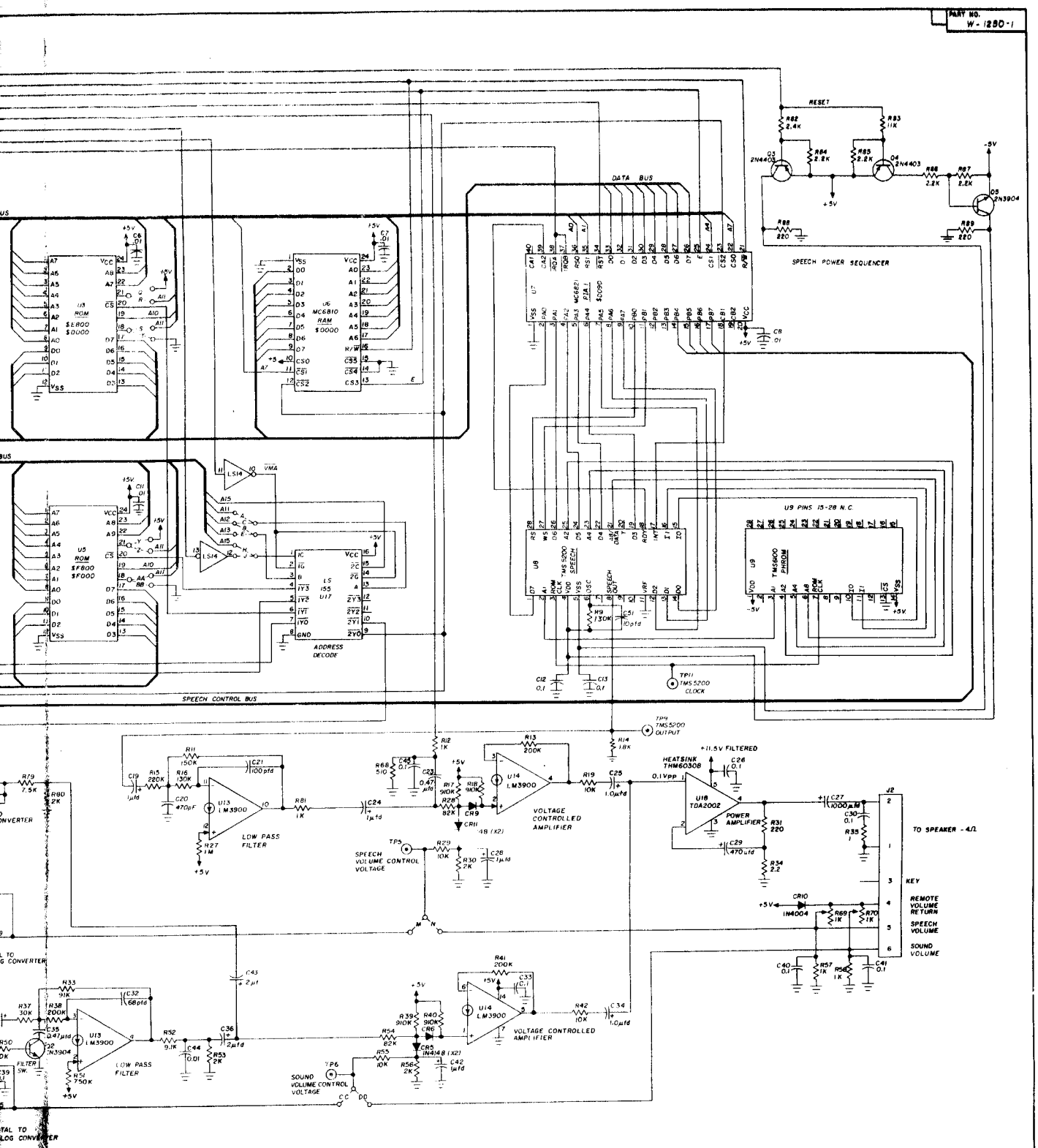

SQUAWK & TALK JUMPERS

PROM-ROM	JUMPERS
2716 9316	A,B,D,P,Q,T,U,Y,X,BB
2532 9332	C,E,G,Q,S,U,W,Y,AA
NO VOCALIZER	H
WITH VOCALIZER	J
6808 MPU	L (WITH 6810 RAM)
6802 MPU	K (NO 6810 RAM)
NO AY3-8912	EE

	SPEECH	SOUND
COMPUTER VOLUME CONTROL	CC	M
REMOTE VOLUME CONTROL	DD	N

ALL DESIGN, OPERATIVE AND PROCESS DATA PERTAINING TO THE ARTICLE SHOWN ON THIS SHEET IS THE PROPERTY OF BALLY MFG. CORP. CHICAGO ILL. THIS INFORMATION IS DISCLOSED IN CONFIDENCE AND IS NOT TO BE COPIED, REPRODUCED, REVEALED TO OR APPROPRIATED BY OTHERS IN PART OR IN WHOLE, WITHOUT THE EXPRESS CONSENT OF THE OWNERS. THE PRINT IS LOANED AND MUST NOT BE USED IN ANY MANNER DETRIMENTAL TO THE INTEREST OF THE OWNERS, AND MUST BE RETURNED ON DEMAND.

NO.	LET.	CHANGE	DATE	BY
	A	R9 WAS 240K Ω	1/17/81	

REMOVE ALL BURRS
TOLERANCES ON DIMENSIONS UNLESS OTHERWISE SPECIFIED
FRACTIONS ± .005
DECIMALS ± .003
EXCEPT HOLE MA. S
ANGLES ± 1°
DO NOT SCALE DRAWING

DR. BY FFC	DATE 1-13-81	
CK. BY A.M.C.R.	DATE 1-13-81	
AP'D BY	DATE	
AP'D BY STA	DATE 1-6-81	
FINISH		
HARDENING		

Bally MANUFACTURING CORP. #1220
2640 BELMONT AVENUE
CHICAGO, ILLINOIS

PRINT CONTROL | DIE SIZE | C.C. | FT. PER M | LBS. PER M

NAME: SQUAWK & TALK SCHEMATIC A8
ASSEM. NO. USED: AS-2518-61
SCALE
MATERIAL
CODE
PART NO. W-1250-1

DESIGNATION LIST

DESIGNATION NO.	DESCRIPTION
C1	.01 MF 25V
C2	.01 MF 500V
R1	100K OHM 1/4W 5%
R2	2.2K OHM 1/4W 5%
R3	100K OHM 1/4W 5%
R4	2.2K OHM 1/4W 5%
R5	100K OHM 1/4W 5%
R6	2.2K OHM 1/4W 5%
R7	100K OHM 1/4W 5%
R8	2.2K OHM 1/4W 5%
R9	100K OHM 1/4W 5%
R10	2.2K OHM 1/4W 5%
R11	100K OHM 1/4W 5%
R12	2.2K OHM 1/4W 5%
R13	1.5K OHM 1/4W 5%
R14	300K OHM 1/4W 5%
R15	1.5K OHM 1/4W 5%
R16	300K OHM 1/4W 5%
R17	1.5K OHM 1/4W 5%
R18	300K OHM 1/4W 5%
R19	1.5K OHM 1/4W 5%
R20	300K OHM 1/4W 5%
R21	1.5K OHM 1/4W 5%
R22	300K OHM 1/4W 5%
R23	1.5K OHM 1/4W 5%
R24	300K OHM 1/4W 5%
R25	1.5K OHM 1/4W 5%
R26	300K OHM 1/4W 5%
R27-R33	1.2K OHM 1/4W 5%
R34	100K OHM 1/4W 5%
R35-R40	300K OHM 1/4W 5%
R41	39K OHM 1/4W 5%
R42	240K OHM 1/4W 5%
R43-R48	9.1K OHM 1/4W 5%
R49-R54	20K OHM 1/4W 5%
VR1	IN3045A
Q1-Q6	MPS-A42
Q7-Q12	2N5401
Q13-Q20	MPS-A42
U1	MC14543
DS1	6 DIGIT DISPLAY PANEL

DESIGNATION NO.	DESCRIPTION
DS1MH	TACK-SCREW RPLCMNT
	DISPLAY MTG. TOP
	DISPLAY MTG. BOTTOM
	PRESSURE SENSITIVE
	TAPE
	BUMPER
J1	.045 SQ. PIN
TP1-TP3	TEST POINTS
	JUMPER TIN 22 AWC
A080-91491-A000	6 DIGIT DISPLAY

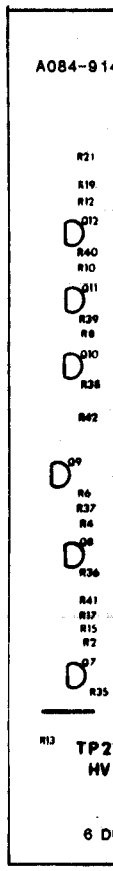

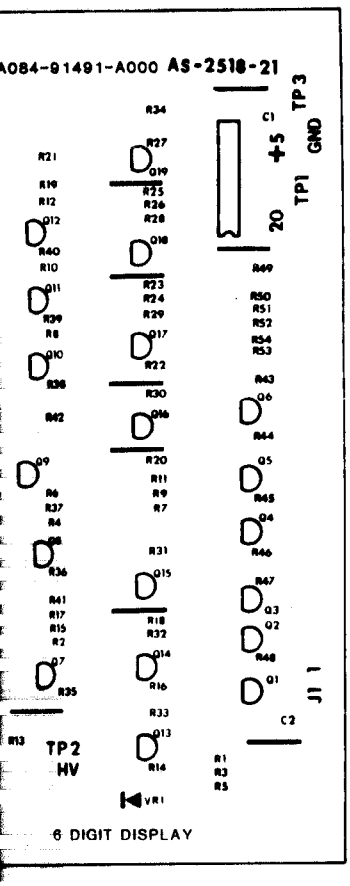

CROSS REF. LIST

DESCRIPTION	QTY.	DESIGNATION NO.	PART NUMBER
.01 MF 25V	1	C1	0360-00800-0005
.01 MF 500V	1	C2	0360-00800-0013
1.2K 1/4W 5%	7	R27-R33	100E-00005-0063
1.5K 1/4W 5%	7	R13, R15, R17, R19 R21, R23, R25	100E-00005-0065
2.2K 1/4W 5%	6	R2, R4, R6, R8, R10 R12	100E-00005-0069
9.1K 1/4W 5%	6	R43-R48	100E-00005-0087
20K 1/4W 5%	6	R49-R54	100E-00005-0095
39K 1/4W 5%	1	R41	100E-00005-0102
100K 1/4W 5% METAL FILM	7	R1, R3, R5, R7, R9 R11, R34	100E-00001-0011
240K 1/4W 5%	1	R42	100E-00005-0125
300K 1/4W 5%	13	R14, R16, R18, R20, R22, R24, R26, R35 R40	100E-00005-0127
1N3045A	1	VR1	103E-00001-0028
2N5401	6	Q7-Q12	104E-00002-0007
MPS-A42	13	Q1-Q6 Q13 Q20	104E-00001-0016
MC14543	1	U1	0360-00803-0014
6 DIGIT DISPLAY	1	DS1	0360-00804-0016
DS1 MTG. HDW TACK SCREW RPLCMNT	2	DS1MH	0095-00900-0000
DISPLAY MTG. TOP	1		0017-00042-0155
DISPLAY MTG. BOTTOM	1		0017-00042-0156
PRESSURE SENSITIVE TAPE			0017-0081-0095
BUMPER	1		0017-00041-0598
.045 SQ. PIN	1	J1	0304-00804-0010
TEST POINTS	3	TP1-TP3	0017-00007-0131
JUMPER TIN 22 AWG	9		117E-00001-0001
6 DIGIT DISPLAY PCB.	1		A080-91491-A000

REVISIONS		

PROJECT ENG: A. AARSTAD			USED ON	Bally / MIDWAY MFG. CO. FRANKLIN PK ILL
DO NOT SCALE DWG	HEAT TREAT	SCALE FULL	NO. REQ'D 1 PER	
DIM TOLERANCES UNLESS SPECIFIED CONCENTRICITY T.I.R. .002 FRACTIONAL ± 1/64 DECIMAL ± .005 HOLE DIA + .002 .000	DRN. BAK CKD. DATE 11/14/84	MAT'L. FINISH	ASSEMBLY DWG. SIX DIGIT DISPLAY A082-91491-A000	PART NO. M051-00114 -A028

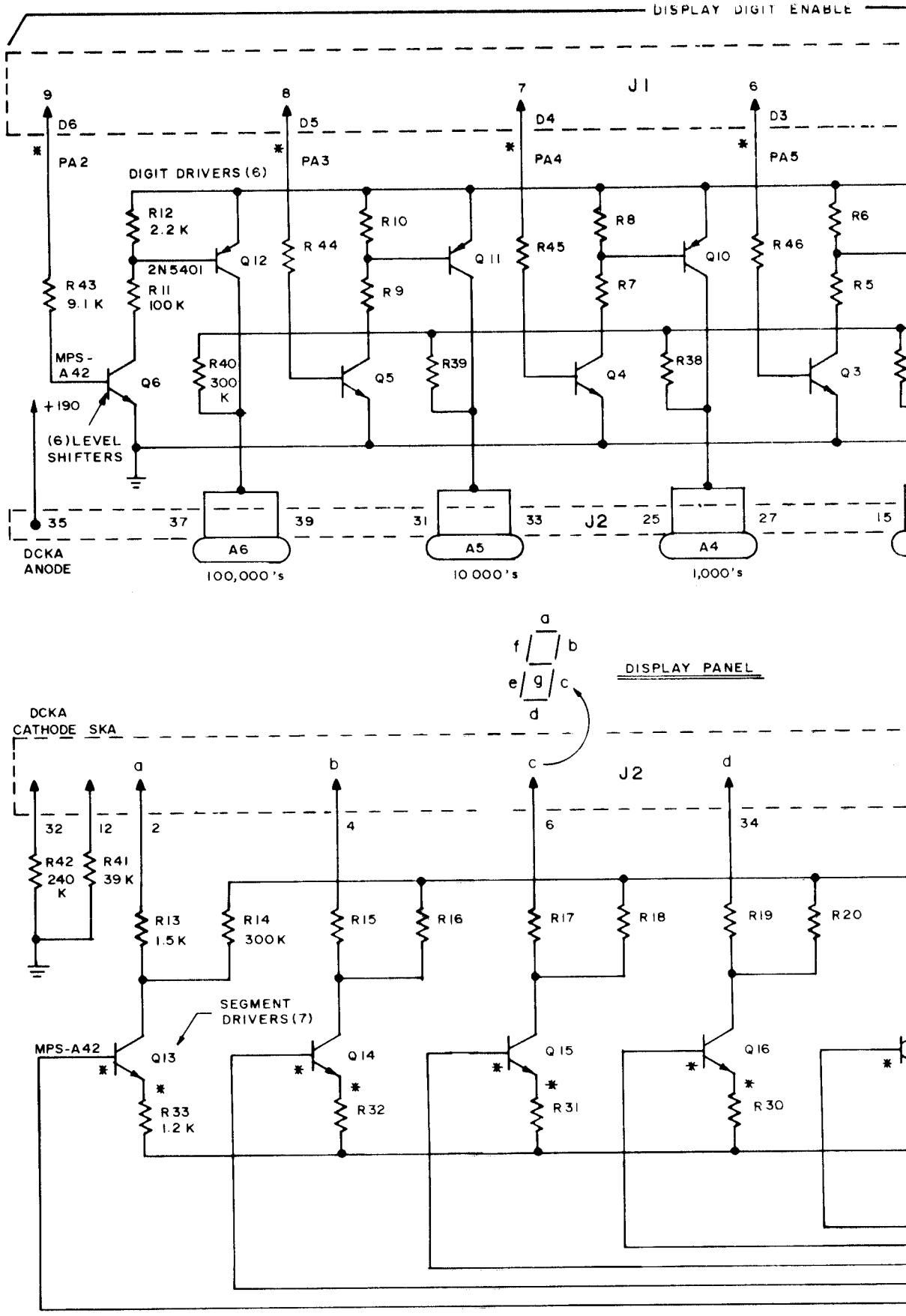

NOTES :

1) UNLESS OTHERWISE SPECIFIED ALL RESISTORS ARE ± 5%, 1/4 W.

2) PREFIX ALL REFERENCE DESIG. WITH ASSY REF. DESIG. "A1"

3) * INDICATES "AID" TEST POINT.

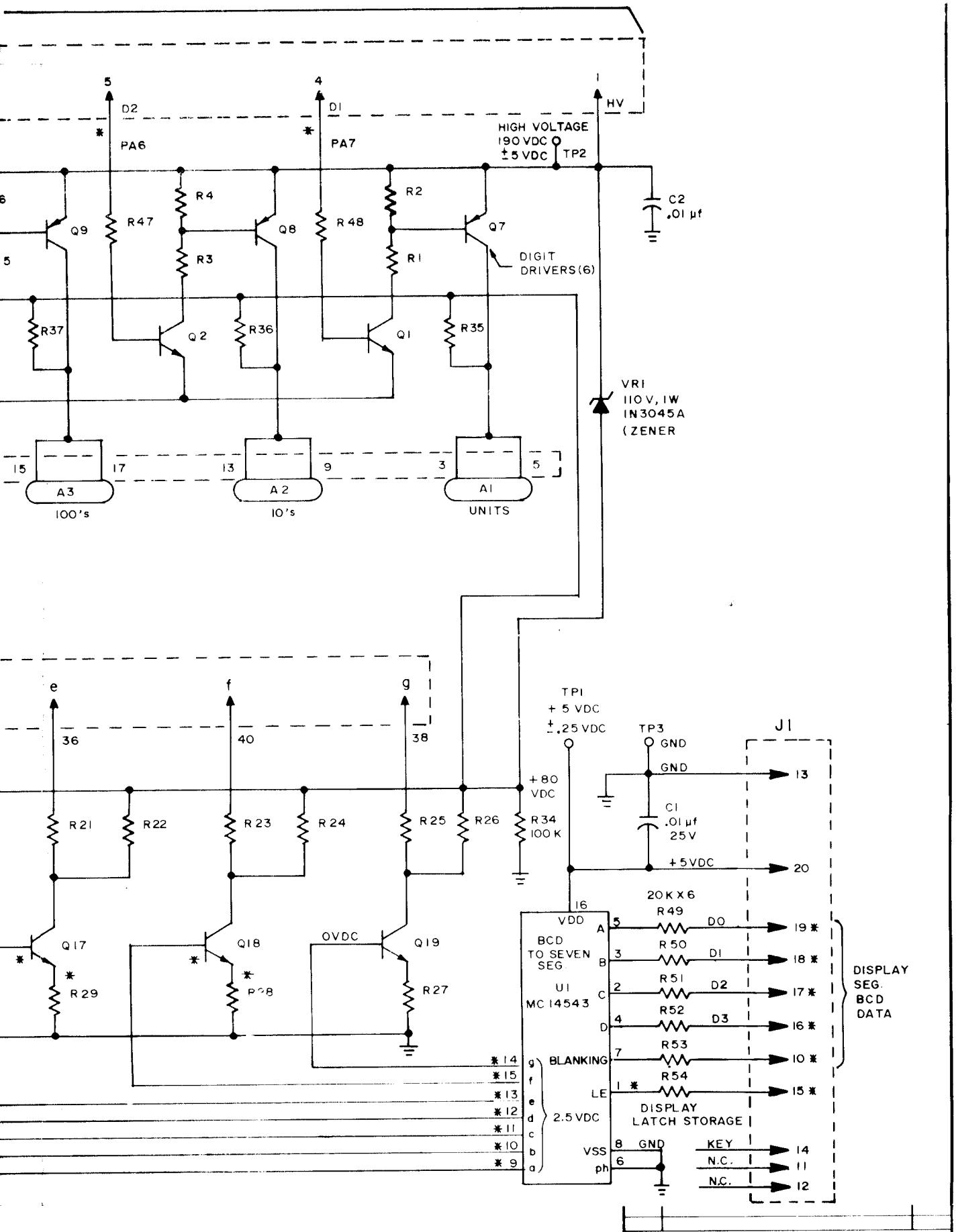

REVISIONS

PROJECT ENG: D. MACDONALD			USED ON PINBALL	Bally / MIDWAY MFG. CO. FRANKLIN PK ILL
DO NOT SCALE DWG	HEAT TREAT	SCALE FULL	NO. REQ'D 1 PER	
DIM. TOLERANCES UNLESS SPECIFIED	DRN BB	MAT'L	SIX DIGIT DISPLAY BOARD SCHEMATIC "A1" A084-91491-A000	PART NO M051-00114-A029
	CKD. Dom 5/18/83	FINISH		
	DATE 5/17/83			

DESIGNATION LIST

DESIGNATION NO.	DESCRIPTION
C1	.01 MF 25V
C2	.01 MF 500V
R1	100K OHM 1/4W 5%
R2	2.2K OHM 1/4W 5%
R3	100K OHM 1/4W 5%
R4	2.2K OHM 1/4W 5%
R5	100K OHM 1/4W 5%
R6	2.2K OHM 1/4W 5%
R7	100K OHM 1/4W 5%
R8	2.2K OHM 1/4W 5%
R9	100K OHM 1/4W 5%
R10	2.2K OHM 1/4W 5%
R11	100K OHM 1/4W 5%
R12	2.2K OHM 1/4W 5%
R13	1.5K OHM 1/4W 5%
R14	300K OHM 1/4W 5%
R15	1.5K OHM 1/4W 5%
R16	300K OHM 1/4W 5%
R17	1.5K OHM 1/4W 5%
R18	300K OHM 1/4W 5%
R19	1.5K OHM 1/4W 5%
R20	300K OHM 1/4W 5%
R21	1.5K OHM 1/4W 5%
R22	300K OHM 1/4W 5%
R23	1.5K OHM 1/4W 5%
R24	300K OHM 1/4W 5%
R25	1.5K OHM 1/4W 5%
R26	300K OHM 1/4W 5%
R27-R33	1.2K OHM 1/4W 5%
R34	100K OHM 1/4W 5%
R35-R40	300K OHM 1/4W 5%
R41	39K OHM 1/4W 5%
R42	240K OHM 1/4W 5%
R43-R48	9.1K OHM 1/4W 5%
R49-R54	20K OHM 1/4W 5%
R55	9.1K OHM 1/4W 5%
R56	100K OHM 1/4W 5%
R57	2.2K OHM 1/4W 5%
R58	300K OHM 1/4W 5%
R59	NOT USED
R60,R61	1.5K OHM 1/4W 5%
R62	300K OHM 1/4W 5%
R63	150K OHM 1/4W 5%

DESIGNATION NO.	DESCRIPTION
CR1,CR2	1N4148
VR1	1N3045A/110V ZENER
Q1-Q6	MPS-A42
Q7-Q12	2N5401
Q13-Q20	MPS-A42
Q21	2N5401
Q22	MPS-A42
U1	MC14543
DS1	DISPLAY ASS'Y
J1	10 PIN WAFER KK-156 (2)
TP1-TP3	TEST LOOPS
	7 DIGIT DISPLAY PCB
	BUMPER

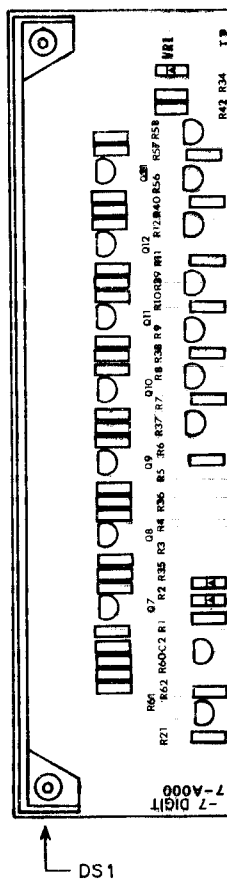

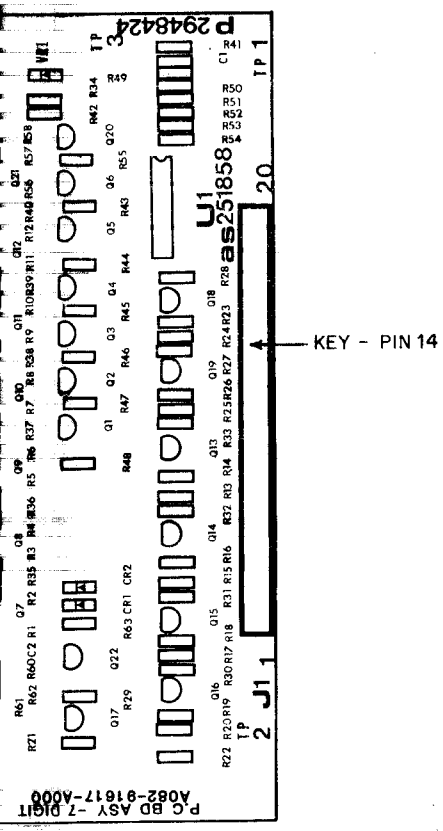

CROSS REFERENCE LIST

DESCRIPTION	QTY	DESIGNATION NO.	BALLY'S PART NOS.	MIDWAY'S PART NOS.
.01 MF 25V	1	C1	E-586-85	0360-00800-0005
.01 MF 500V	1	C2	E-586-65	0360-00800-0013
1.2K 1/4W 5%	7	R27-R33	E-105-222	100E-00005-0063
1.5K 1/4W 5%	9	R13,R15,R17,R19 R21,R23,R25,R60 R61	E-105-229	100E-00005-0065
2.2K 1/4W 5%	7	R2,R4,R6,R8,R10 R12,R57	E-105-287	100E-00005-0069
9.1K 1/4W 5%	7	R43-R48,R55	E-105-228	100E-00005-0087
20K 1/4W 5%	6	R49-R54	E-105-242	100E-00005-0095
39K 1/4W 5%	1	R41	E-105-231	100E-00005-0102
100K 1/4W 5%	8	R1,R3,R5,R7,R9, R11,R34,R56	E-105-331	100E-00001-0011
150K 1/4W 5%	1	R63	E-105-248	100E-00001-0120
240K 1/4W 5%	1	R42	E-105-271	100E-00001-0125
300K 1/4W 5%	15	R14,R16,R18,R20, R22,R24,R26,R35-R40,R58,R62	E-105-227	100E-00001-0127
1N3045A/110V ZENER	1	VR1	E-598-7	103E-00001-0028
1N4148	2	CR1,CR2	E-587-14	103E-00002-0005
2N5401	7	Q7-Q12,Q21	E-585-32	0360-00802-0006
MPS-A42	15	Q1-Q6,Q13-Q20,Q22	E-585-33	0360-00802-0007
MC14543	1	U1	E-620-38	0360-00803-0014
7 DIGIT DISPLAY	1	DS1	E-680-7	0360-00804-0022
DS1 MTG. HDW TACK-SCREW REPLACEMENT	2			0095-00900-0000
DISPLAY MTG. TOP	1		P-2399	0017-00042-0155
DISPLAY MTG. BOTTOM	1		P-2399-1	0017-00042-0156
PRESSURE SENSITIVE TAPE				0017-00081-0095
BUMPER	1		R-206-9	0017-00041-0598
10 PIN WAFER KK156	2	J1	E-736-10	0151-00031-10XB
TEST LOOPS	3	TP1-TP3	P-5399	0017-00007-0131
7 DIGIT DISPLAY PCB.	1		P-2948-424	A080-91617-A000

REVISIONS

PROJECT ENG: D. MACDONALD			USED ON	Bally / MIDWAY MFG. CO. FRANKLIN PK. ILL.
DO NOT SCALE DWG.	HEAT TREAT	SCALE: FULL	NO. REQ'D: 1 PER	
DIM. TOLERANCE UNLESS SPECIFIED	DRN. TBB	MAT'L	SEVEN DIGIT DISPLAY ASSY DWG. A082-91617-A000	PART NO. M051-00114-A05
	CKD.	FINISH		
	DATE 12 09 83			

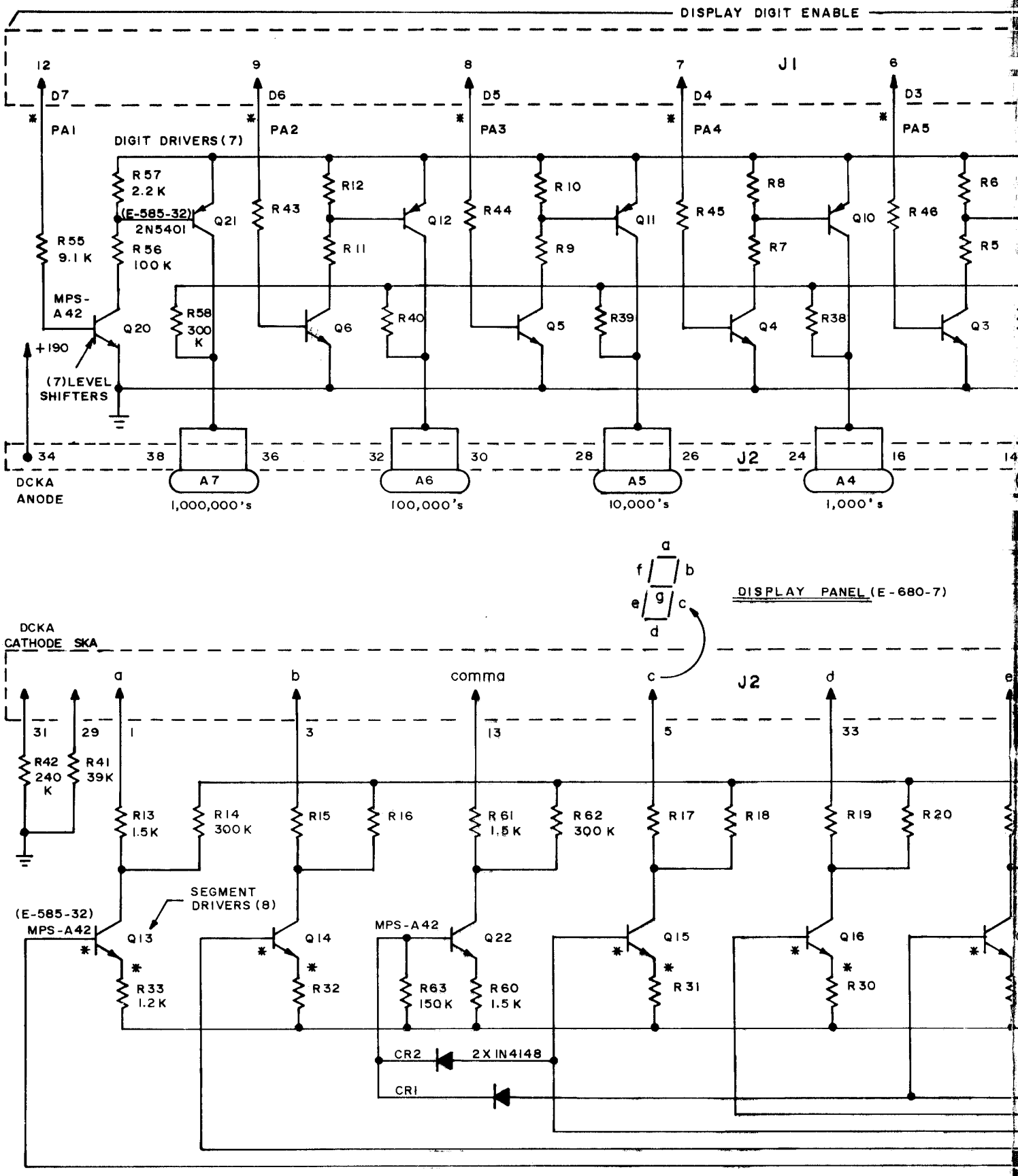

NOTES:

1) UNLESS OTHERWISE SPECIFIED ALL RESISTORS ARE ± 5%, 1/4 W.

2) PREFIX ALL REFERENCE DESIG. WITH ASSY REF. DESIG. "A1".

3) * INDICATES "AID" TEST POINT.

PROJECT EN
DO N
DIM. TOLER
UNLESS SPE
CONCENTRICITY
FRACTIONAL
DECIMAL
HOLE DIA

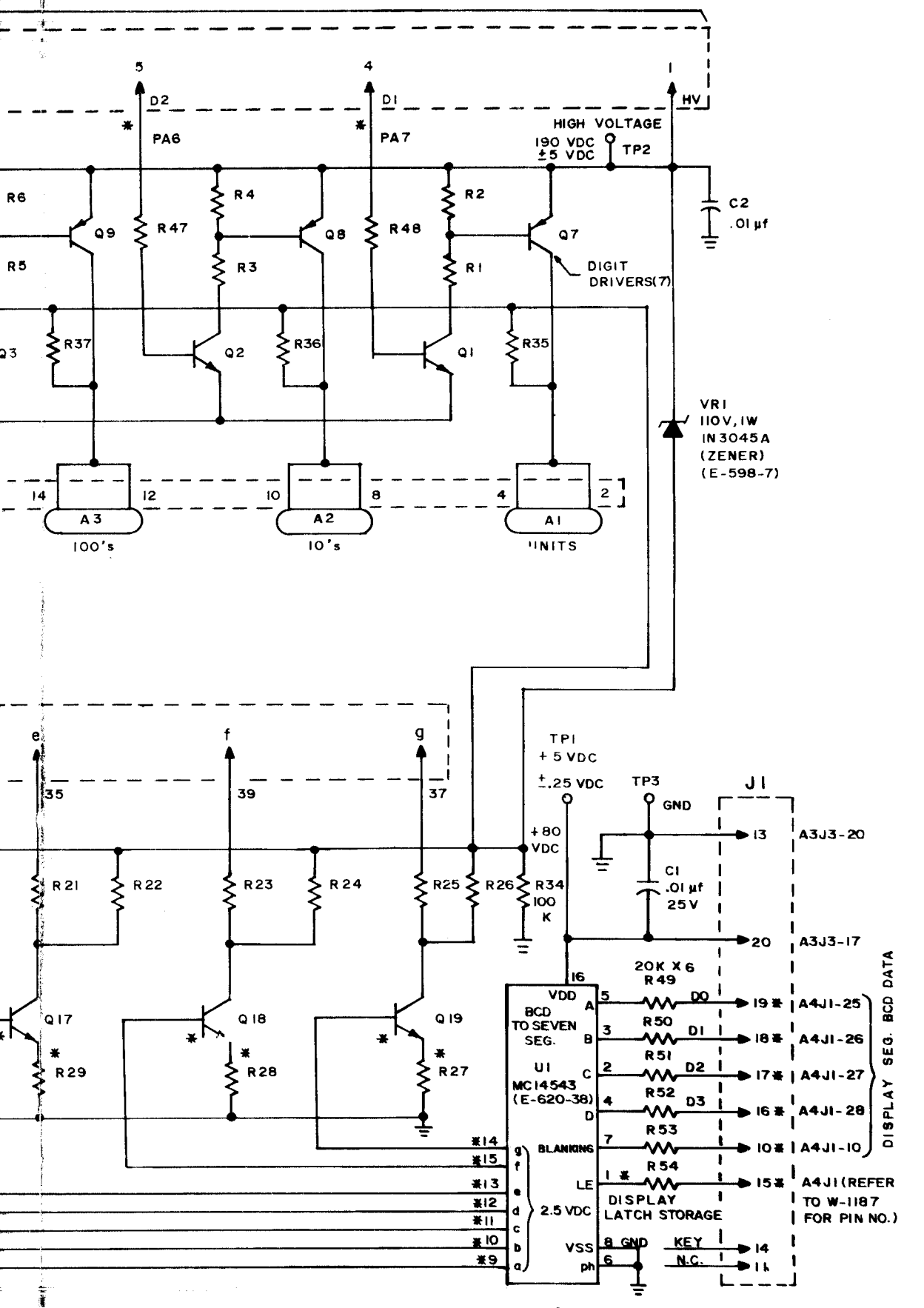

REVISIONS				
ECT ENG: D. MACDONALD		USED ON PINBALL	Bally / MIDWAY MFG. CO. FRANKLIN PK., ILL.	
DO NOT SCALE DWG.	HEAT TREAT	SCALE FULL	NO. REQ'D 1 PER	
TOLERANCES ESS SPECIFIED	DRN. TBB CKD. 5/17/83 DATE 5/13/83	MAT'L. FINISH	SEVEN DIGIT DISPLAY BOARD SCHEMATIC "A1" A084-91617-A000	PART NO. M051 - 00114 -A057

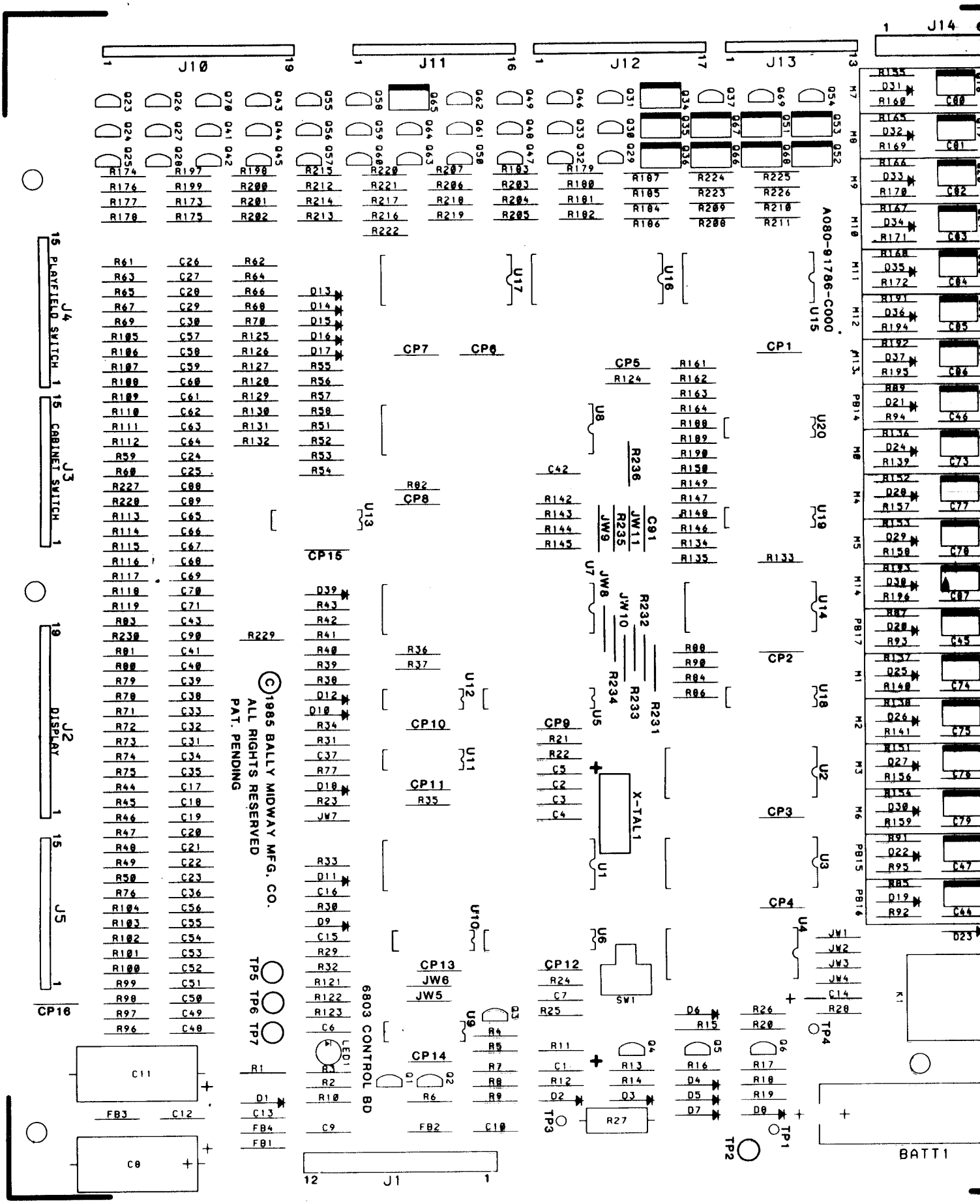
J10
J11
J12
J13
J14
A080-91786-C000
J4 PLAYFIELD SWITCH
J3 CABINET SWITCH
J2 DISPLAY
J5
CP16
J1
6803 CONTROL BD
©1985 BALLY MIDWAY MFG. CO.
ALL RIGHTS RESERVED
PAT. PENDING
X-TAL1
SW1
BATT1
TP1
TP2
TP3
TP4
TP5 TP6 TP7

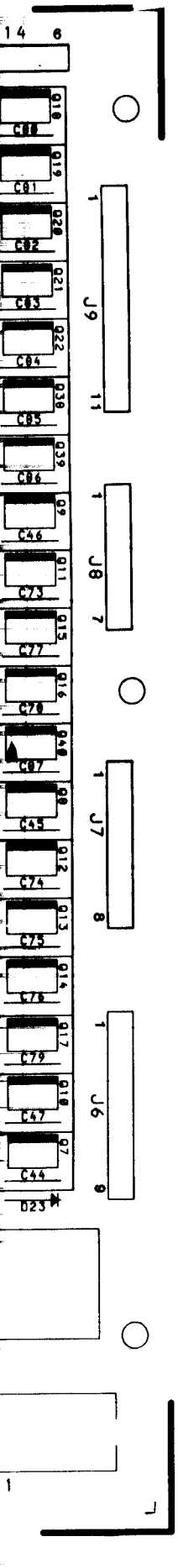

6803 CONTROL BOARD
A084-91786-C000
M051-00C53-C003 (Page 1 of 4)

DESIGNATION LIST

DESIGNATION	DESCRIPTION
C1	6.8UF 25V TANT.
C2,C3	27PF 50V CER.
C4	.1UF 50V CER.
C5	4.7UF 25V TANT.
C6	.01UF 50V CER.
C7	47PF 50V CER.
C8	470UF 16V ELEC.
C9,C10	.01UF 50V CER.
C11	470UF 25V ELEC.
C12,C13	.01UF 50V CER.
C14	4.7UF 25V TANT.
C15,C16	.01UF 50V CER.
C17 - C23	470PF 1KV CER.
C24 - C30	390PF 50V CER.
C31 - C36	470PF 1KV CER.
C37	.05UF 16V CER.
C38 - C41	470PF 1KV CER.
C42	.01UF 50V CER.
C43	.003UF 1KV CER.
C44 - C47	.002UF 1KV CER.
C48 - C56	470PF 1KV CER.
C57 - C71	390PF 50V CER.
C73 - C87	.002 1KV CER.
C88 - C90	390PF 50V CER.
C91	470PF 1KV CER.
CP1 - CP16	.01 50V CER.
R1	560 OHM 1/4W 5%
R2	2.7K 1/4W 5%
R3	1K 1/4W 5%
R4	9.1K 1/4W 5%
R5	7.5K 1/4W 5%
R6	2.7K 1/4W 5%
R7	39K 1/4W 5%
R8	100 OHM 1/4W 5%
R9	82 OHM 1/4W 5%
R10,R11	47K 1/4W 5%
R12,R13	10K 1/4W 5%
R14	82K 1/4W 5%
R15	62K 1/4W 5%
R16	5.6K 1/4W 5%
R17	3K 1/4W 5%
R18	910 OHM 1/4W 5%
R19	750 OHM 1/4W 5%
R20	1.5K 1/4W 5%
R21 - R23	3.3K 1/4W 5%
R24	120 OHM 1/4W 5%
R25	680 OHM 1/4W 5%
R26	100K 1/4W 5%
R27	82 OHM 1W 10%

DESIGNATION LIST

DESIGNATION	DESCRIPTION
R28	270 OHM 1/4W 5%
R29	1K 1/4W 5%
R30	10K 1/4W 5%
R31	15K 1/4W 5%
R32	1K 1/4W 5%
R33	10K 1/4W 5%
R34	15K 1/4W 5%
R35	3.3K 1/4W 5%
R36 - R43	4.7K 1/4W 5%
R44 - R50	1.2K 1/4W 5%
R51 - R58	3.3K 1/4W 5%
R59 - R61	1.2K 1/4W 5%
R62	56K 1/4W 5%
R63	1.2K 1/4W 5%
R64	56K 1/4W 5%
R65	1.2K 1/4W 5%
R66	56K 1/4W 5%
R67	1.2K 1/4W 5%
R68	56K 1/4W 5%
R69	1.2K 1/4W 5%
R70	56K 1/4W 5%
R71 - R76	1.2K 1/4W 5%
R77	270K 1/4W 5%
R78 - R82	1.2K 1/4W 5%
R83	110 OHM 1/4W 5%
R84	3.9K 1/4W 5%
R85	120 OHM 1/4W 5%
R86	3.9K 1/4W 5%
R87	120 OHM 1/4W 5%
R88	3.9K 1/4W 5%
R89	120 OHM 1/4W 5%
R90	3.9K 1/4W 5%
R91	120 OHM 1/4W 5%
R92 - R95	330 OHM 1/4W 5%
R96 - R104	470 OHM 1/4W 5%
R105 - R119	1.2K 1/4W 5%
R121	120 OHM 1/4W 5%
R122	1.2K 1/4W 5%
R123	2K 1/4W 5%
R124	3.3K 1/4W 5%
R125 - R132	56K 1/4W 5%
R133 - R135	1.2K 1/4W 5%
R136 - R138	120 OHM 1/4W 5%
R139 - R141	330 OHM 1/4W 5%
R142 - R145	3.3K 1/4W 5%
R146 - R150	1.2K 1/4W 5%
R151 - R155	120 OHM 1/4W 5%
R156 - R160	330 OHM 1/4W 5%
R161 - R164	1.2K OHM 1/4W 5%

DESIGNATION LIST

DESIGNATION	DESCRIPTION
R165 - R168	120 OHM 1/4W 5%
R169 - R172	330 OHM 1/4W 5%
R173 - R187	2K 1/4W 5%
R188 - R190	1.2K 1/4W 5%
R191 - R193	120 OHM 1/4W 5%
R194 - R196	330 OHM 1/4W 5%
R197 - R226	2K 1/4W 5%
R227,R228	1.2K 1/4W 5%
R229	56K 1/4W 5%
R230	1.2K 1/4W 5%
R231 - R234	330 OHM 1/4W 5%
R235	3.3K 1/4W 5%
R236	1.2K 1/4W 5%
D1	1N958B
D2	1N4606
D3	1N4148
D4,D5	1N4606
D6	1N4148
D7,D8	1N4606
D9 - D18	1N4148
D19 - D38	1N4004
D39	1N4148
Q1	2N5305
Q2	2N3904
Q3	2N4403
Q4	2N3904
Q5	2N4403
Q6	2N3904
Q7 - Q22	SE9302
Q23 - Q33	2N5060
Q34 - Q36	MCR 106-1
Q37	2N5060
Q38 - Q40	SE9302
Q41 - Q50	2N5060
Q51 - Q53	MCR 106-1
Q54 - Q64	2N5060
Q65 - Q68	MCR 106-1
Q69,Q70	2N5060
U1	6803
U4	6116 RAM
U5	74HCT245
U6	74LS373
U7,U8	6821
U9	74LS10
U10	74LS04
U11	4011
U12	4584
U13	4502
U14	74LS154

DESIGNATION LIST

DESIGNATION	DESCRIPTION
U15 - U17	4514B
U18 - U20	CA3081
XTAL-1	3.580 MHZ CRYSTAL
LED 1	LED GREEN
TP1 - TP7	TEST POINTS
SW1	SWITCH P.B.
BATT-1	BATTERY 3.6V
JW2	ZERO OHM RES. JUMPER
JW4	ZERO OHM RES. JUMPER
JW6	ZERO OHM RES. JUMPER
JW8	ZERO OHM RES. JUMPER
JW10	ZERO OHM RES. JUMPER
K1	RELAY 48V DC
XU1,XU7,XU8	40 PIN IC SOCKET
XU2, XU3	28 PIN IC SOCKET
XU4	24 PIN IC SOCKET
FB1 - FB4	FERRITE BEAD
J1	11 - .045 SQ. PINS
J2	18 - .025 SQ. PINS
J3	14 - .025 SQ. PINS
J4	14 - .025 SQ. PINS
J5	14 - .025 SQ. PINS
J6	8 - .045 SQ. PINS
J7	7 - .045 SQ. PINS
J8	6 - .045 SQ. PINS
J9	10 - .045 SQ. PINS
J10	18 - .025 SQ. PINS
J11	17 - .025 SQ. PINS
J12	16 - .025 SQ. PINS
J13	12 - .025 SQ. PINS
J14	5 - .045 SQ. PINS
P/O BATT-1	TY-WRAP
6803 CONTROL BD.	P.C. BOARD

CROSS

DESCRI
27pf 5
47pf 5
390pf
470pf
.002u
.003u
.01uf
.05uf
.1uf 5
4.7uf
6.8uf
470uf
470uf
82 OHM
100 O
110 O
120 O
270 O
330 O
470 O
560 O
680 O
750 O
910 O
1K 1/
1.2K
1.5K
2K 1/
2.7K
3K 1/
3.3K
3.9K
4.7K
5.6 1

ROSS REFERENCE LIST

ESCRIPTION	QTY.	DESIGNATION NO.	PART NOS.
7pf 50V CER.	2	C2, C3	0360-00800-0052
7pf 50V CER.	1	C7	0360-00800-0027
90pf 50V CER.	25	C24-C30, C57-C71 C88-C90	0360-00800-0001
70pf 1KV CER.	27	C17-C23, C31-C36, C38-C41, C48-C56, C91	0360-00800-0003
002uf 1KV CER.	19	C44-C47, C73-C87	0360-00800-0012
003uf 1KV CER.	1	C43	0360-00800-0025
01uf 50V CER.	24	C6, C9, C10, C12, C13 C15, C16, C42, CP1-CP16	0365-00800-0014
05uf 16V CER.	1	C37	0360-00800-0006
1uf 50V CER.	1	C4	0360-00800-0058
.7uf 25V TANT	2	C5, C14	0360-00800-0008
.8uf 25V TANT	1	C1	0360-00800-0048
70uf 16V ELEC	1	C8	0360-00800-0022
70uf 25V ELEC	1	C11	0360-00800-0024
2 OHM 1/4W 5%	1	R9	100E-00005-0031
00 OHM 1/4W 5%	1	R8	100E-00005-0033
10 OHM 1/4W 5%	1	R83	100E-00005-0034
20 OHM 1/4W 5%	21	R24, R85, R87, R89, R91, R121, R136-R138, R151-R155, R165-R168, R191-R193	100E-00005-0035
70 OHM 1/4W 5%	1	R28	100E-00005-0044
30 OHM 1/4W 5%	23	R92-R95, R139-R141, R156-R160, R169-R172, R194-R196, R231-R234	100E-00005-0047
70 OHM 1/4W 5%	9	R96-R104	100E-00005-0051
60 OHM 1/4W 5%	1	R1	100E-00005-0054
80 OHM 1/4W 5%	1	R25	100E-00005-0056
50 OHM 1/4W 5%	1	R19	100E-00005-0057
10 OHM 1/4W 5%	1	R18	100E-00005-0059
K 1/4W 5%	3	R3, R29, R32	100E-00005-0061
.2K 1/4W 5%	60	R44-R50, R59-R61, R63, R65, R67, R69, R71-R76 R78-R82, R105-R119, R122 R133-R135, R146-R150, R161-R164, R188-R190, R227, R228, R230, R236	100E-00005-0063
.5K 1/4W 5%	1	R20	100E-00005-0065
K 1/4W 5%	46	R123, R173-R187 R197-R226	100E-00005-0068
.7K 1/4W 5%	2	R2, R6	100E-00005-0071
K 1/4W 5%	1	R17	100E-00005-0073
.3K 1/4W 5%	18	R21-R23, R35, R51-R58, R124, R142-R145, R235	100E-00005-0074
.9K 1/4W 5%	4	R84, R86, R88, R90	100E-00005-0077
.7K 1/4W 5%	8	R36-R43	100E-00005-0079
.6 1/4W 5%	1	R16	100E-00005-0082

CROSS REFERENCE LIST

DESCRIPTION	QTY.	DESIGNATION NO.	PART NOS.
7.5 1/4W 5%	1	R5	100E-00005-0085
9.1 1/4W 5%	1	R4	100E-00005-0087
10K 1/4W 5%	4	R12, R13, R30, R33	100E-00005-0088
15K 1/4W 5%	2	R31, R34	100E-00005-0092
39K 1/4W 5%	1	R7	100E-00005-0102
47K 1/4W 5%	2	R10, R11	100E-00005-0104
56K 1/4W 5%	14	R62, R64, R66, R68 R70, R125-R132, R229	100E-00005-0106
62K 1/4W 5%	1	R15	100E-00005-0107
82K 1/4W 5%	1	R14	100E-00005-0112
100K 1/4W 5%	1	R26	100E-00005-0115
270K 1/4W 5%	1	R77	100E-00005-0126
82 OHM 1W 10%	1	R27	100E-00007-0014
IN958B ZENER	1	D1	103E-00001-0002
IN4004	20	D19-D38	103E-00003-0005
IN4148	13	D3, D6, D9-D18, D39	103E-00002-0005
IN4606	5	D2, D4, D5, D7, D8	103E-00002-0006
2N3904	3	Q2, Q4, Q6	104E-00001-0006
2N4403	2	Q3, Q5	104E-00002-0006
2N5060	35	Q23-Q33, Q37, Q41-Q50, Q54-Q64, Q69, Q70	104E-00015-0001
2N5305	1	Q1	104E-00007-0003
MCR106-1	10	Q34-Q36, Q51-Q53 Q65-Q68	0360-00802-0009
SE9302	19	Q7-Q22, Q38-Q40	0360-00802-0008
4011	1	U11	0360-00803-0010
4502	1	U13	0360-00803-0005
4514B	3	U15-U17	0360-00803-0013
4584	1	U12	0066-090BX-XXDX
6116 RAM	1	U4	0365-00803-0013
6803 MPU	1	U1	0360-00803-0048
6821 PIA	2	U7, U8	0360-00803-0017
74LS04	1	U10	0A15-00803-0010
74LS10	1	U9	0A89-00803-0007
75LS154	1	U14	0360-00803-0024
74HCT245	1	U5	0365-00803-0014
74LS373	1	U6	0A89-00803-0006
CA3081	3	U18-U20	0360-00803-0007
3.580 MHz CRYSTAL	1	XTAL-1	109E-00001-0003
LED GREEN	1	LED 1	0017-00007-0131
TEST POINTS	7	TP1-TP7	0017-00007-0131
SWITCH P.B.	1	SW1	0017-00032-0038
BATTERY 3.6V	1	BATT-1	0017-00003-0172
ZERO OHM RES. JUMPER	5	JW2, JW4, JW6, JW8, JW10	117E-00001-0001
RELAY 48VDC	1	K1	114E-00001-0011
40 PIN I.C. SOCKET	3	XU1, XU7, XU8	110E-00001-0011
28 PIN I.C. SOCKET	2	XU2, XU3	110E-00001-0010
24 PIN I.C. SOCKET	1	XU4	110E-00001-0007
FERRITE BEAD	4	FB1-FB4	0316-00804-0002

CROSS REFERENCE LIST

DESCRIPTION	QTY.	DESIGNATION NO.	PART NOS.
.025 SQ. PINS	123	J2, J3, J4, J5, J10, J11, J12, J13	0304-00804-0009
.045 SQ. PINS	47	J1, J6, J7, J8, J9, J14	0304-00804-0010
TY-WRAP	1	P/O BATT-1	0017-00042-0622
P.C. BOARD	1	6803 CONTROL BOARD	A080-91786-C000

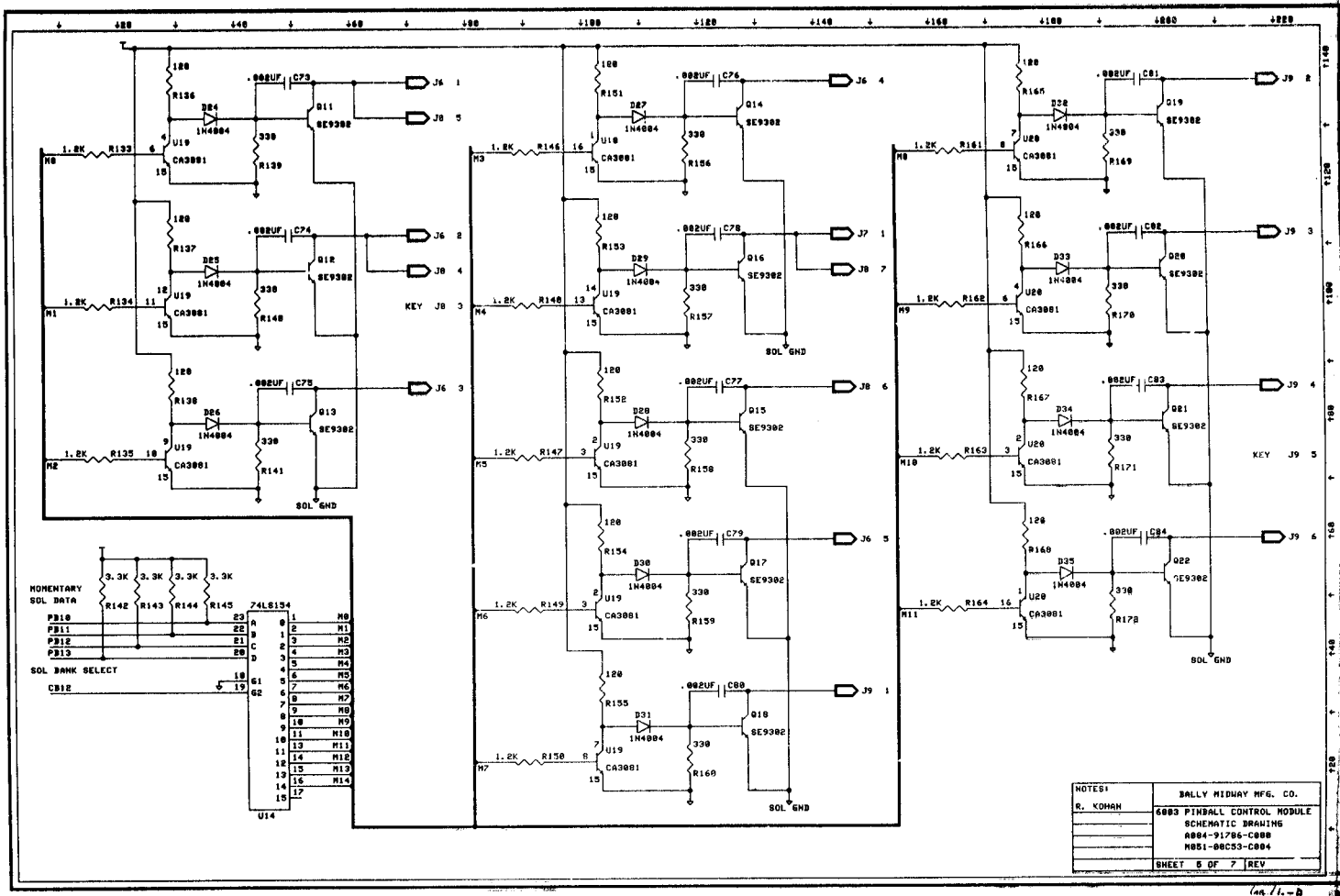
MOMENTARY SOL DATA
SOL BANK SELECT
74LS154
U14
KEY J8 3
KEY J9 5
SOL GND
NOTES:
R. KOHAN
BALLY MIDWAY MFG. CO.
6803 PINBALL CONTROL MODULE
SCHEMATIC DRAWING
A804-91786-C000
M851-00C53-C004
SHEET 5 OF 7
REV

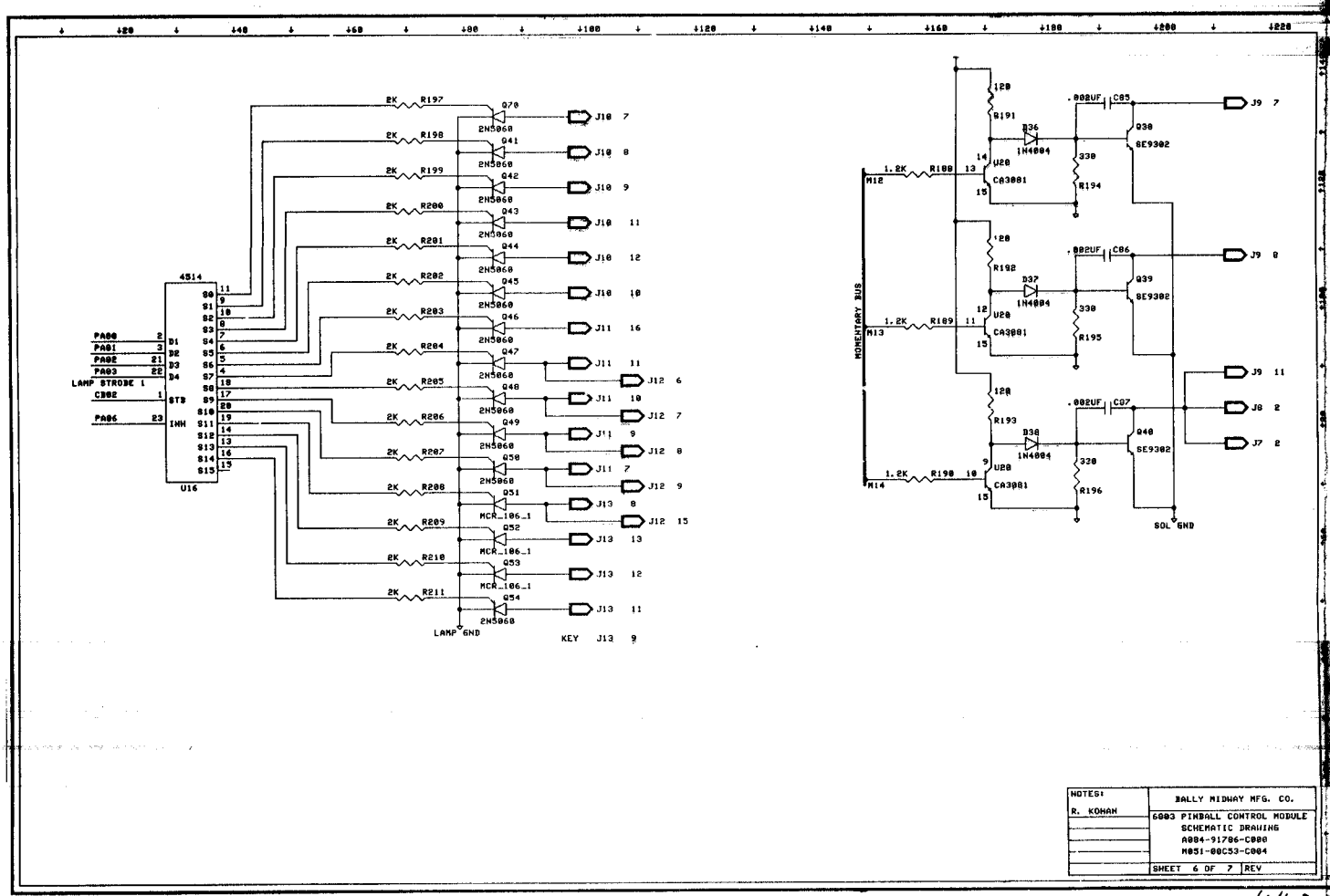
LAMP STROBE 1
LAMP GND
KEY J13 9
MOMENTARY BUS
U16
SOL GND
NOTES:
R. KOHAN
BALLY MIDWAY MFG. CO.
6803 PINBALL CONTROL MODULE
SCHEMATIC DRAWING
A804-91786-C000
M851-00C53-C004
SHEET 6 OF 7
REV

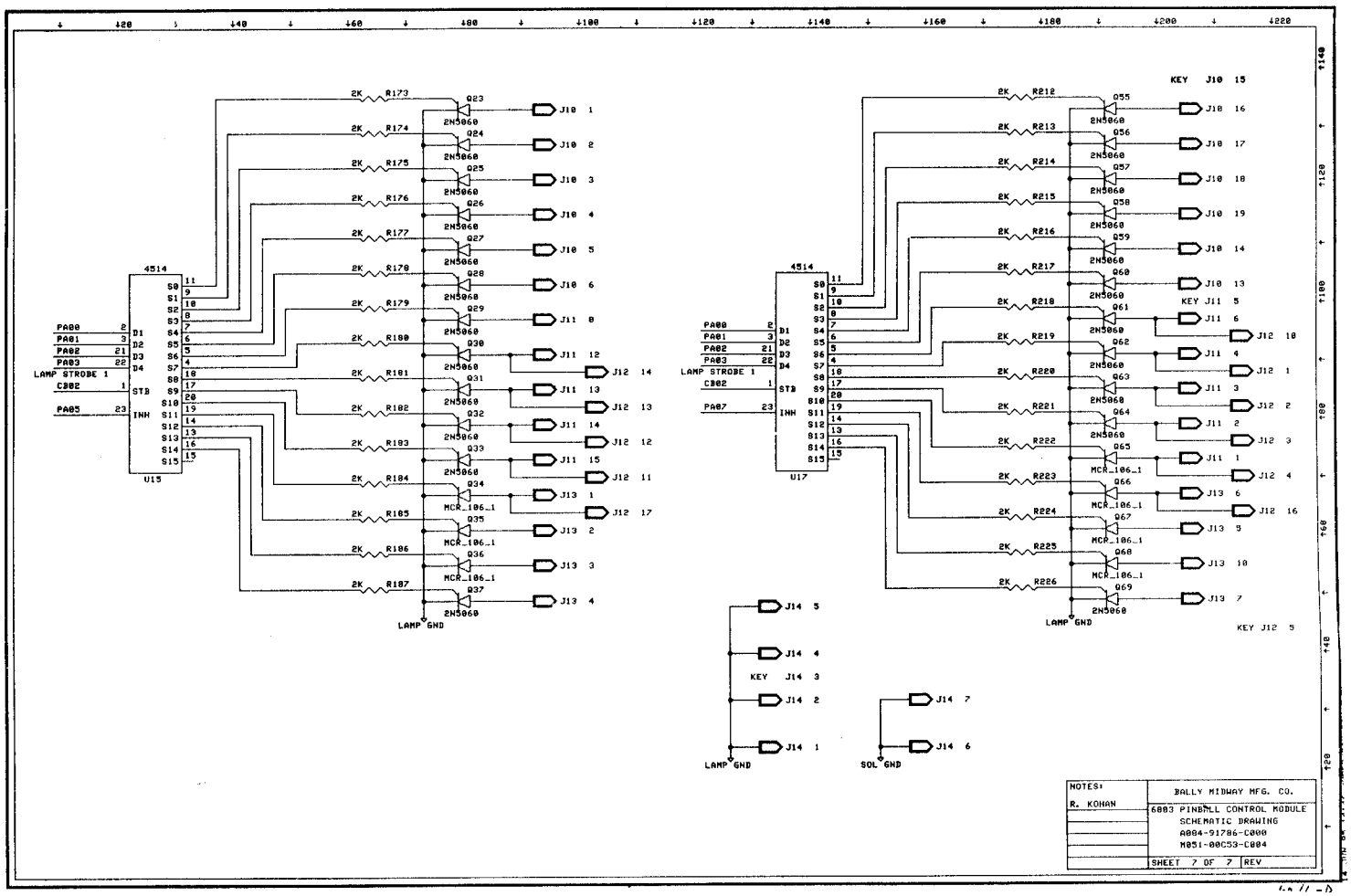
4514
U15
PA00
PA01
PA02
PA03
LAMP STROBE 1
C802
PA05
STB
INH
2K R173
2K R174
2K R175
2K R176
2K R177
2K R178
2K R179
2K R180
2K R181
2K R182
2K R183
2K R184
2K R185
2K R186
2K R187
Q23
Q24
Q25
Q26
Q27
Q28
Q29
Q30
Q31
Q32
Q33
Q34
Q35
Q36
Q37
2N5060
MCR_106_1
LAMP GND
J10 1
J10 2
J10 3
J10 4
J10 5
J10 6
J11 8
J11 12
J11 13
J11 14
J11 15
J13 1
J13 2
J13 3
J13 4
J12 14
J12 13
J12 12
J12 11
J12 17
4514
U17
PA07
2K R212
2K R213
2K R214
2K R215
2K R216
2K R217
2K R218
2K R219
2K R220
2K R221
2K R222
2K R223
2K R224
2K R225
2K R226
Q55
Q56
Q57
Q58
Q59
Q60
Q61
Q62
Q63
Q64
Q65
Q66
Q67
Q68
Q69
KEY J10 15
J10 16
J10 17
J10 18
J10 19
J10 14
J10 13
KEY J11 5
J11 6
J11 4
J11 3
J11 2
J11 1
J13 6
J13 5
J13 10
J13 7
J12 10
J12 1
J12 2
J12 3
J12 4
J12 16
KEY J12 5
J14 5
J14 4
KEY J14 3
J14 2
J14 1
J14 7
J14 6
SOL GND
NOTES:
R. KOHAN
BALLY MIDWAY MFG. CO.
6803 PINBALL CONTROL MODULE
SCHEMATIC DRAWING
A804-91786-C000
M851-00C53-C004
SHEET 7 OF 7
REV

EIGHT BALL CHAMP LAMP DRIVER LOCATIONS

SCR	CONNECTOR/PIN	LAMP	PHASE	WIRE CODE
Q55	J10 - 16	'A' ROLLOVER	B	71
Q57	J10 - 18	B A L L	B	58
Q26	J10 - 4	B A L L	B	41
Q43	J10 - 11	B A L L	B	43
Q58	J10 - 19	B A L L	B	10
Q41	J10 - 8	BALL IN PLAY	A	62
Q31	J11 - 13	BONUS 1	A	61
Q45	J11 - 10	BONUS 2	A	52
Q63	J11 - 3	BONUS 3	A	25
Q32	J11 - 14	BONUS 4	A	73
Q49	J11 - 9	BONUS 5	A	18
Q64	J11 - 2	BONUS 6	A	23
Q33	J11 - 15	BONUS 7	A	98
Q50	J11 - 7	BONUS 8	A	81
Q65	J11 - 1	BONUS 9	A	15
Q34	J12 - 17	BONUS 10	A	34
Q51	J12 - 15	BONUS 11	A	40
Q66	J12 - 16	BONUS 12	A	14
Q35	J13 - 2	BONUS 13	A	78
Q52	J13 - 13	BONUS 14	A	25
Q67	J13 - 5	BONUS 15	A	30
Q52	J13 - 13	BONUS 120,000	B	25
Q67	J13 - 5	BONUS 240,000	B	30
Q36	J13 - 3	BONUS SPECIAL	B	95
Q23	J10 - 1	'C' ROLLOVER	B	91
Q24	J10 - 2	CREDIT	A	45
Q27	J10 - 5	DOUBLES PLAYFIELD VALUE	B	60
Q57	J10 - 18	DROP TARGET 1	A	58
Q26	J10 - 4	DROP TARGET 2	A	41
Q43	J10 - 11	DROP TARGET 3	A	43
Q58	J10 - 19	DROP TARGET 4	A	10
Q27	J10 - 5	DROP TARGET 5	A	60
Q44	J10 - 12	DROP TARGET 6	A	34
Q59	J10 - 14	DROP TARGET 7	A	36
Q45	J10 - 10	DROP TARGET 9	A	57
Q60	J10 - 13	DROP TARGET 10	A	51
Q29	J11 - 8	DROP TARGET 11	A	67
Q46	J11 - 16	DROP TARGET 12	A	53
Q61	J11 - 6	DROP TARGET 13	A	12
Q30	J11 - 12	DROP TARGET 14	A	45
Q47	J11 - 11	DROP TARGET 15	A	13
Q53	J13 - 12	E I G H T	B	80
Q68	J13 - 10	E I G H T	B	57
Q37	J13 - 4	E I G H T	B	70
Q54	J13 - 11	E I G H T	B	72
Q69	J13 - 7	E I G H T	B	54
Q50	J12 - 9	'EIGHT BALL' AWARDS E/BALL	B	81
Q36	J13 - 3	'EIGHT BALL' AWARDS SPECIAL	A	95
Q70	J10 - 7	EXTRA BALL	A	56
Q25	J10 - 3	GAME OVER	A	95
Q70	J10 - 7	'H' ROLLOVER	B	56
Q56	J10 - 17	HIGH SCORE TO DATE	A	97
Q59	J10 - 14	LEFT OUTLANE	B	36
Q24	J10 - 2	'M' ROLLOVER	B	45
Q55	J10 - 16	MATCH	A	71
Q41	J10 - 8	'P' ROLLOVER	B	62
Q28	J10 - 6	RIGHT OUTLANE	B	21
Q65	J12 - 4	ROLLOVER LANES 10,000	B	15
Q34	J13 - 1	ROLLOVER LANES 20,000	B	34
Q51	J13 - 8	ROLLOVER LANES 30,000	B	40
Q66	J13 - 6	ROLLOVER LANES 40,000	B	14
Q35	J13 - 2	ROLLOVER LANES SPECIAL	B	78
Q31	J12 - 13	SAUCER 2X	B	61
Q48	J12 - 7	SAUCER 3X	B	52
Q63	J12 - 2	SAUCER 5X	B	25

SCR
Q28
Q30
Q56
Q25
Q42
Q23
Q42
Q44
Q49
Q64
Q33
Q53
Q68
Q37
Q54
Q69

TRANSISTOR
Q11
Q12
Q13
Q14
Q16
Q40
Q7
Q22
Q20
Q39
Q21
Q19
Q18

EIGHT BALL CHAMP LAMP DRIVER LOCATIONS

CONNECTOR/PIN	LAMP	PHASE	WIRE CODE
J10 - 6	SAUCER 8-BALL	A	21
J12 - 14	SAUCER 100K	B	73
J10 - 17	SPINNER 1,000	B	97
J10 - 3	SPINNER 3,000	B	95
J10 - 9	SPINNER 5,000	B	35
J10 - 1	S.P.S.A.	A	91
J10 - 9	TILT	A	35
J10 - 12	TRIPLES PLAYFIELD VALUE	B	34
J12 - 8	2X	B	18
J12 - 3	3X	B	23
J12 - 11	5X	B	98
J13 - 12	5,000 DROP TARGET 1/2	A	80
J13 - 10	5,000 DROP TARGET 3	A	57
J13 - 4	5,000 DROP TARGET 4/5	A	70
J13 - 11	5,000 DROP TARGET 6	A	72
J13 - 7	5,000 DROP TARGET 7	A	54

EIGHT BALL CHAMP SOLENOID DRIVER LOCATIONS

CONNECTOR/PIN	COIL	WIRE CODE
J6 - 1	DROP TARGET 1/2	74
J6 - 2	DROP TARGET 3	78
J6 - 3	DROP TARGET 4/5	71
J6 - 4	DROP TARGET 6	86
J8 - 7	DROP TARGET 7	81
J7 - 2	KNOCKER	85
ON CONTROL BOARD	K1 FLIPPER RELAY	
J9 - 6	LEFT SLING SHOT	67
J9 - 3	LEFT THUMPER BUMPER	71
J9 - 8	OUTHOLE	83
J9 - 4	RIGHT SLING SHOT	74
J9 - 2	RIGHT THUMPER BUMPER	78
J9 - 1	SAUCER	80

WIRE COLOR CODE

1 - RED -R-
2 - BLUE -BLU-
3 - YELLOW -Y-
4 - GREEN
5 - WHITE -W-
J - JUMPER
1 - FIRST NUMBER-BODY COLOR
2 - SECOND NUMBER-TRACER COLOR
EXAMPLE: 50 - WHITE
51 - WHITE-RED

6 - BROWN -BR-
7 - ORANGE -O-
8 - BLACK -B-
9 - GRAY
0 - NO TRACER

WIRE COLOR CODE

1-RED -R-
2-BLUE -BLU-
3-YELLOW -Y-
4-GREEN
5-WHITE -W-
J-JUMPER
1-FIRST NUMBER-BODY COLOR
2-SECOND NUMBER-TRACER COLOR
EXAMPLE: 50 -WHITE
51 -WHITE-RED

6-BROWN -BR-
7-ORANGE -O-
8-BLACK -B-
9-GRAY
0-NO TRACER

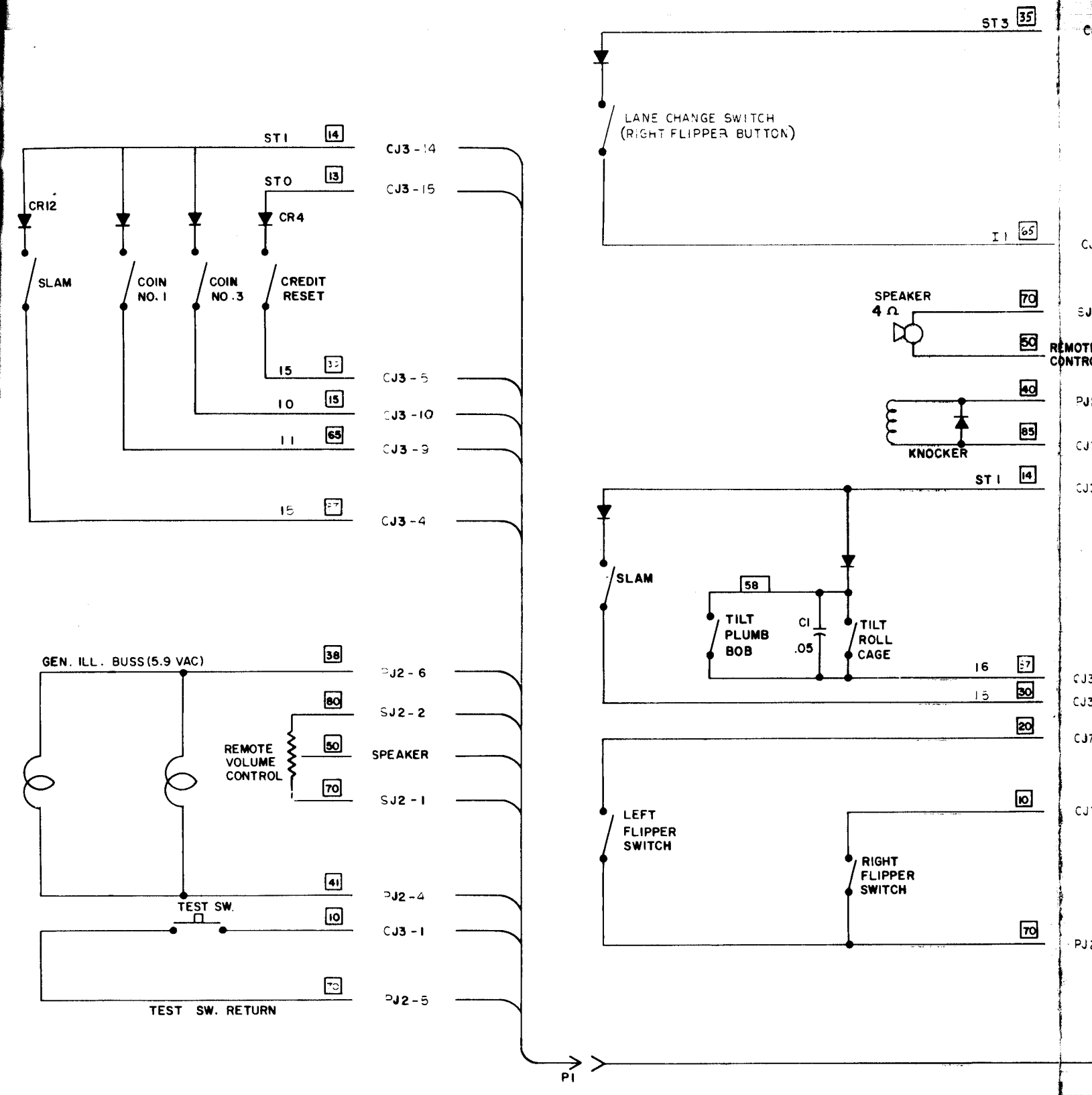

COLOR CODE	
1 RED	6 BROWN
2 BLUE	7 ORANGE
3 YELLOW	8 BLACK
4 GREEN	9 GRAY
5 WHITE	0 NO TRACE

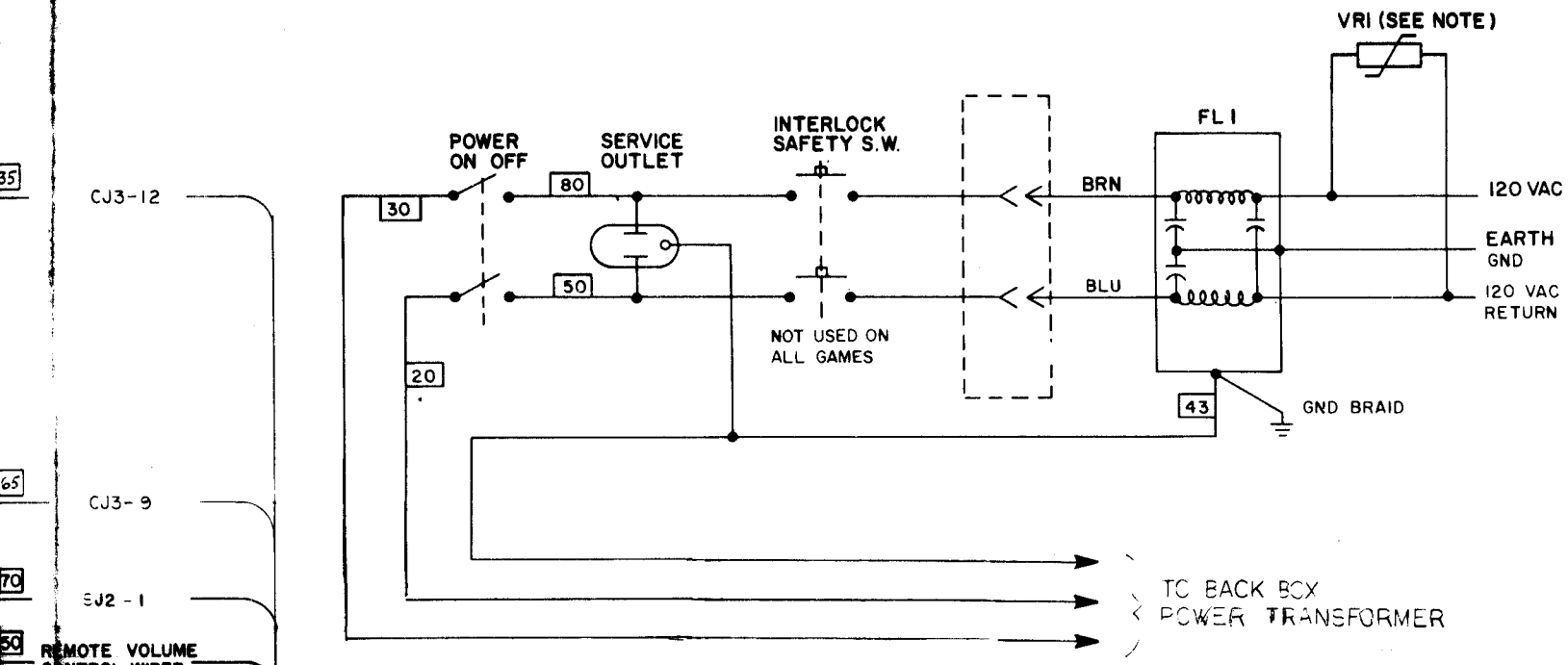

CJ3-12

CJ3-9

CJ2-1

REMOTE VOLUME CONTROL WIPER

PJ2-4

CJ7-2

CJ3-14

CJ3-4

CJ3-5

CJ7-7

CJ7-8

PJ2-5

KEY BOARD

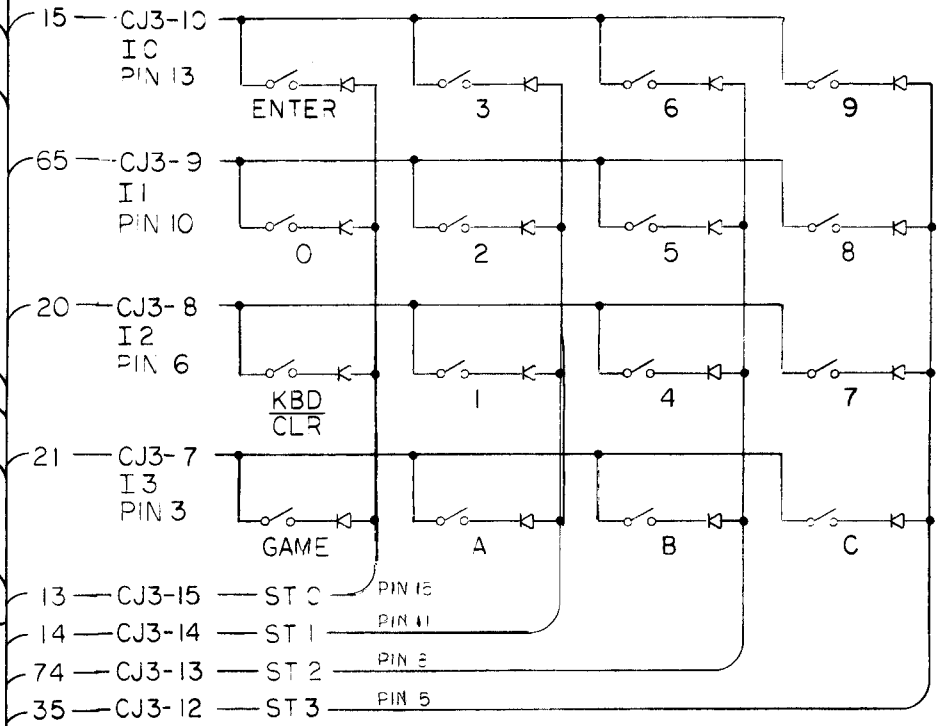

KEY BOARD

PIN	DESIG	COLOR
1		
2		
3	I3	21
4	KEY	
5	ST3	35
6	I2	20
7		
8	ST2	74
9		
10	I1	65
11	ST1	14
12		
13	I0	15
14		
15	ST0	13

TO BACK BOX

CODE
BROWN
ORANGE
BLACK
GRAY
NO TRACE

REVISIONS

PROJECT ENG:			USED ON	Bally / MIDWAY MFG. CO. FRANKLIN PK ILL
DO NOT SCALE DWG	HEAT TREAT	SCALE	NO REQ'D	
DIM TOLERANCES UNLESS SPECIFIED DRN. J. Petza CKD. DATE 8/13/85	MAT'L	8 BALL CHAMP CABINET WIRING SCHEMATIC		PART NO M051-00838-A090
	FINISH			

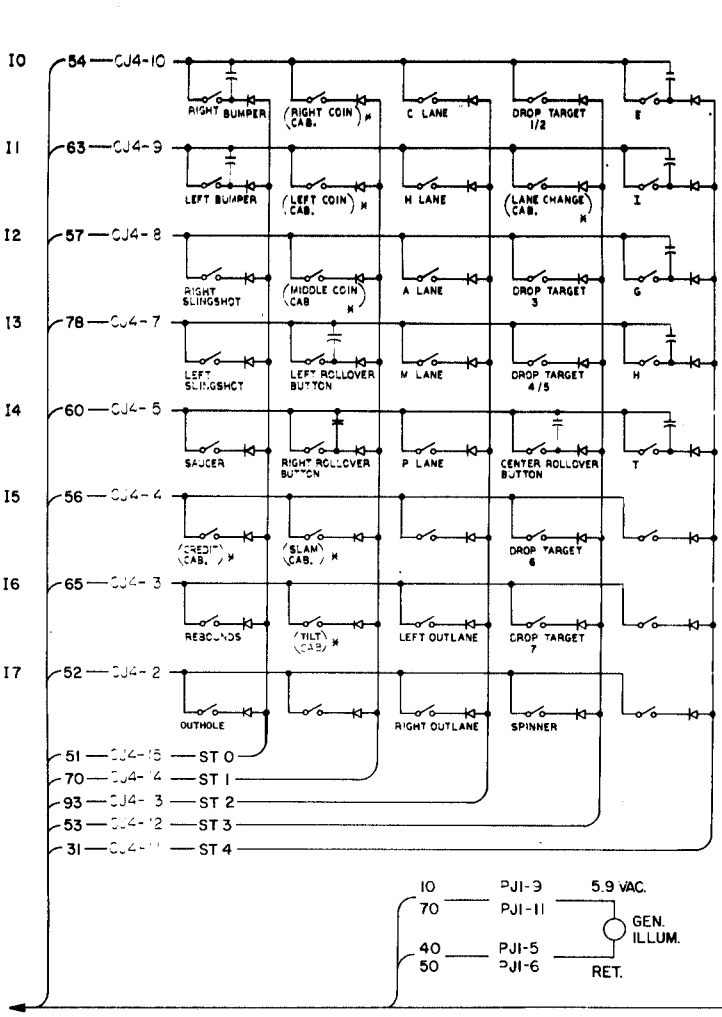

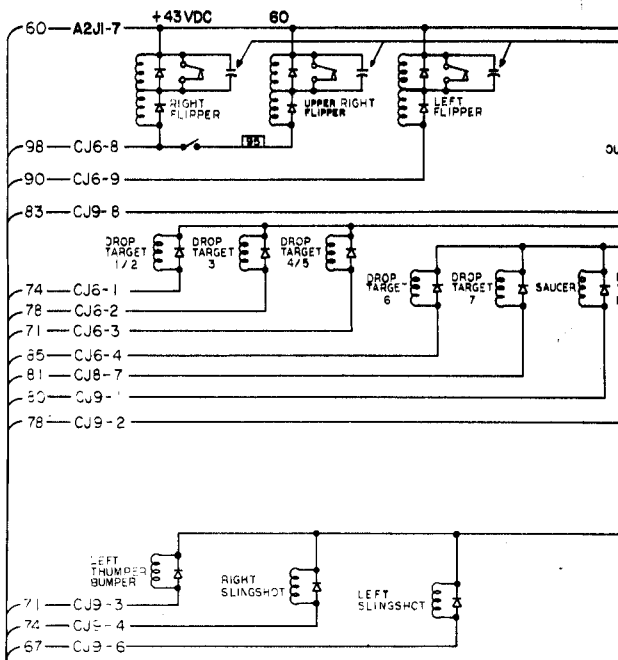

PLAYFIELD

NOTES

1. INDICATES NOT USED
2. N/U = NOT USED ON PLAYFIELD

3. COIL DIODES ARE IN4004 SWITCH DIODES ARE IN4148
   ALL CAPACITORS ARE .05 MFD.
4. GERMANY ONLY - CAPACITOR .01 MFD. @ 500 V.
5. * INDICATES - NOT USED ON PLAYFIELD, DRAWING ONLY TO SHOW POSITION IN SWITCH MATRIX.

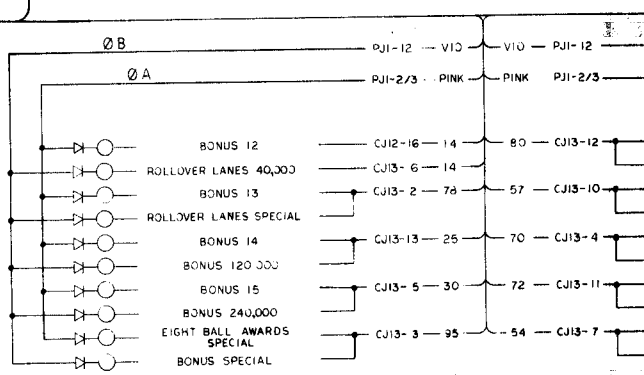

COLOR CODE	
1 RED	6 BROWN
2 BLUE	7 ORANGE
3 YELLOW	8 BLACK
4 GREEN	9 GRAY
5 WHITE	0 NO TRACE

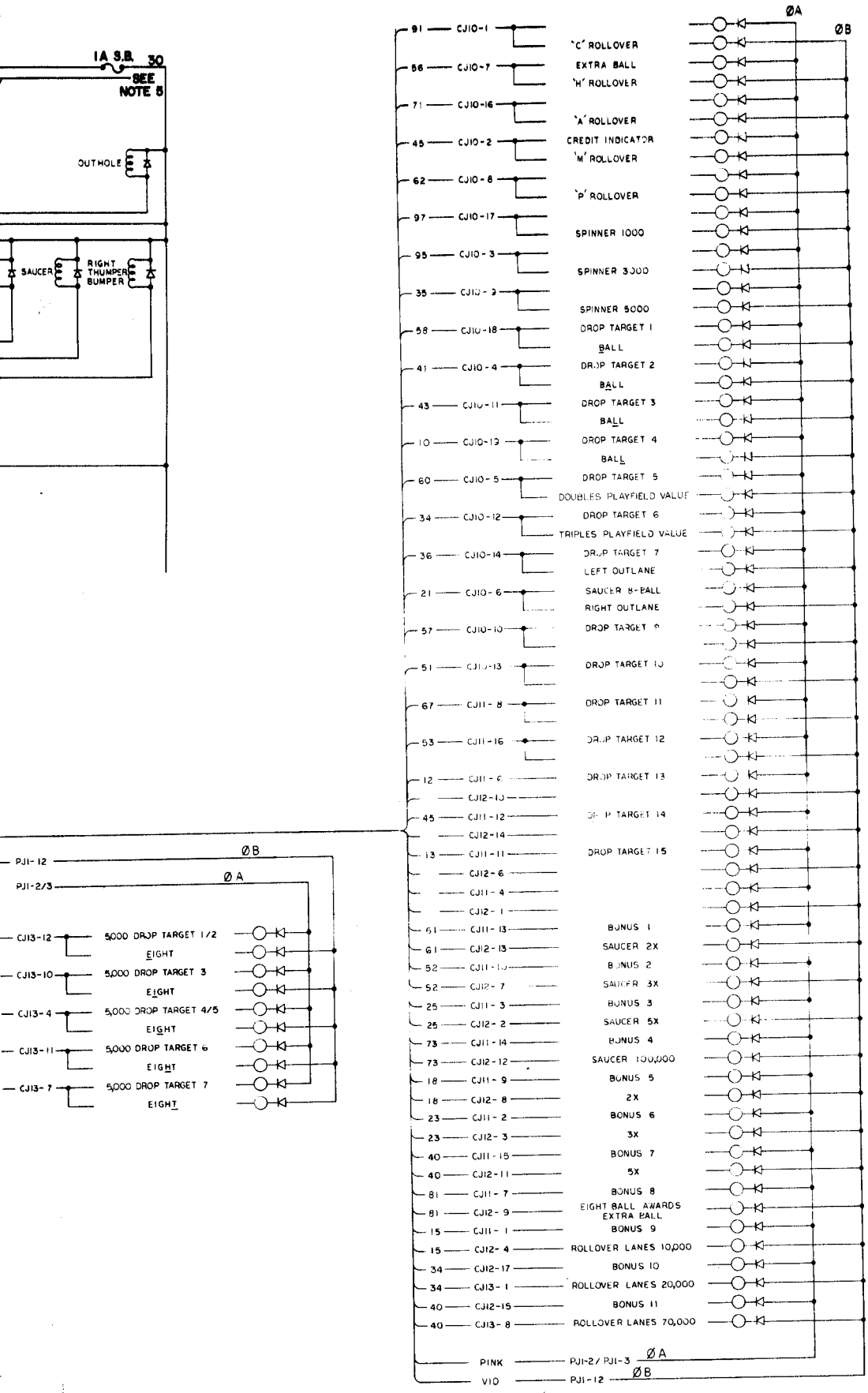

PROJECT ENG:		USED ON 8 BALL CHAMP	Bally / MIDWAY MFG. CO. FRANKLIN PK. ILL
DO NOT SCALE DWG.		NO. REQ'D	
DIM. TOLERANCES UNLESS SPECIFIED	J. Ketza	8 BALL CHAMP PLAYFIELD DIAGRAM	PART NO. M051-00B38-A089
	8/2/85		

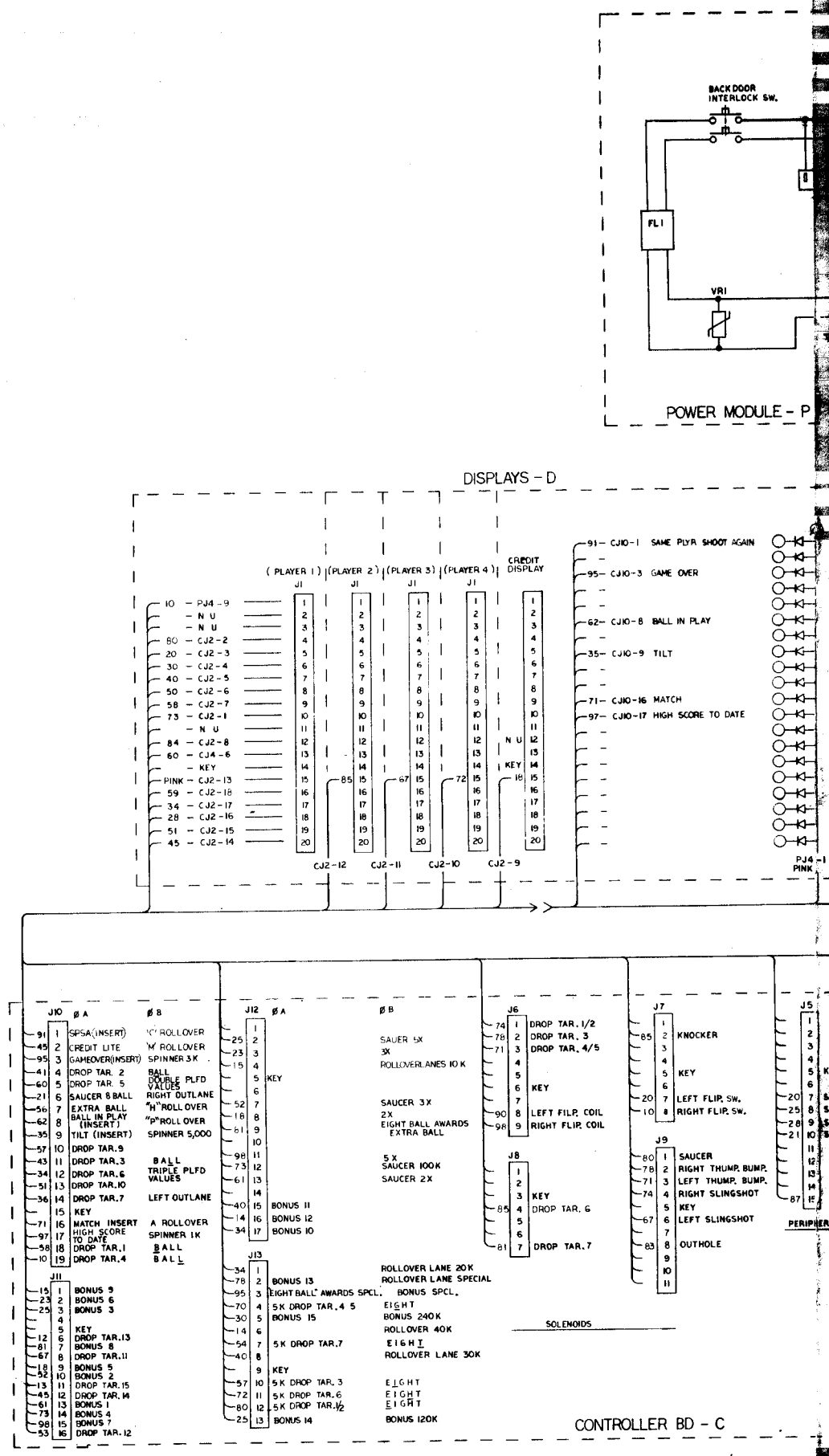
BACK DOOR INTERLOCK SW.
FL1
VR1
POWER MODULE - P
DISPLAYS - D
(PLAYER 1) J1
(PLAYER 2) J1
(PLAYER 3) J1
(PLAYER 4) J1
CREDIT DISPLAY
10 - PJ4-9
- N U
- N U
80 - CJ2-2
20 - CJ2-3
30 - CJ2-4
40 - CJ2-5
50 - CJ2-6
58 - CJ2-7
73 - CJ2-1
- N U
84 - CJ2-8
60 - CJ4-6
- KEY
PINK - CJ2-13
59 - CJ2-18
34 - CJ2-17
28 - CJ2-16
51 - CJ2-15
45 - CJ2-14
CJ2-12
CJ2-11
CJ2-10
CJ2-9
91 - CJ10-1 SAME PLYR SHOOT AGAIN
95 - CJ10-3 GAME OVER
62 - CJ10-8 BALL IN PLAY
35 - CJ10-9 TILT
71 - CJ10-16 MATCH
97 - CJ10-17 HIGH SCORE TO DATE
PJ4-1 PINK
J10 ØA ØB
91 1 SPSA(INSERT) 'C' ROLLOVER
45 2 CREDIT LITE 'M' ROLLOVER
95 3 GAMEOVER(INSERT) SPINNER 3K
41 4 DROP TAR. 2 BALL
60 5 DROP TAR. 5 DOUBLE PLFD VALUES
21 6 SAUCER 8 BALL RIGHT OUTLANE
56 7 EXTRA BALL "H" ROLLOVER
62 8 BALL IN PLAY (INSERT) "P" ROLLOVER
35 9 TILT (INSERT) SPINNER 5,000
57 10 DROP TAR.9
43 11 DROP TAR.3 BALL
34 12 DROP TAR.6 TRIPLE PLFD VALUES
51 13 DROP TAR.10
36 14 DROP TAR.7 LEFT OUTLANE
15 KEY
71 16 MATCH INSERT A ROLLOVER
97 17 HIGH SCORE TO DATE SPINNER 1K
58 18 DROP TAR.1 BALL
10 19 DROP TAR.4 BALL
J11
15 1 BONUS 9
23 2 BONUS 6
25 3 BONUS 3
4
5 KEY
12 6 DROP TAR.13
81 7 BONUS 8
67 8 DROP TAR.11
18 9 BONUS 5
52 10 BONUS 2
13 11 DROP TAR.15
45 12 DROP TAR.14
61 13 BONUS 1
73 14 BONUS 4
98 15 BONUS 7
53 16 DROP TAR.12
J12 ØA ØB
25 1 SAUER 5X
23 2 3X
15 3 ROLLOVERLANES 10 K
4
5 KEY
6
52 7 SAUCER 3X
18 8 2X
61 9 EIGHT BALL AWARDS EXTRA BALL
10
98 11 5X
73 12 SAUCER 100K
61 13 SAUCER 2X
14
40 15 BONUS 11
14 16 BONUS 12
34 17 BONUS 10
J13
34 1 ROLLOVER LANE 20K
78 2 BONUS 13 ROLLOVER LANE SPECIAL
95 3 EIGHT BALL AWARDS SPCL. BONUS SPCL.
70 4 5K DROP TAR.4 5 EIGHT
30 5 BONUS 15 BONUS 240K
14 6 ROLLOVER 40K
54 7 5K DROP TAR.7 EIGHT
40 8 ROLLOVER LANE 30K
9 KEY
57 10 5K DROP TAR. 3 EIGHT
72 11 5K DROP TAR.6 EIGHT
80 12 5K DROP TAR.½ EIGHT
25 13 BONUS 14 BONUS 120K
J6
74 1 DROP TAR. 1/2
78 2 DROP TAR. 3
71 3 DROP TAR. 4/5
4
5
6 KEY
7
90 8 LEFT FLIP. COIL
98 9 RIGHT FLIP. COIL
J8
1
2
3 KEY
85 4 DROP TAR. 6
5
6
81 7 DROP TAR.7
J7
85 1 KNOCKER
2
3
4
5 KEY
6
20 7 LEFT FLIP. SW.
10 8 RIGHT FLIP. SW.
J9
80 1 SAUCER
78 2 RIGHT THUMP. BUMP.
71 3 LEFT THUMP. BUMP.
74 4 RIGHT SLINGSHOT
5 KEY
67 6 LEFT SLINGSHOT
7
83 8 OUTHOLE
9
10
11
SOLENOIDS
J5
PERIPHER
CONTROLLER BD - C

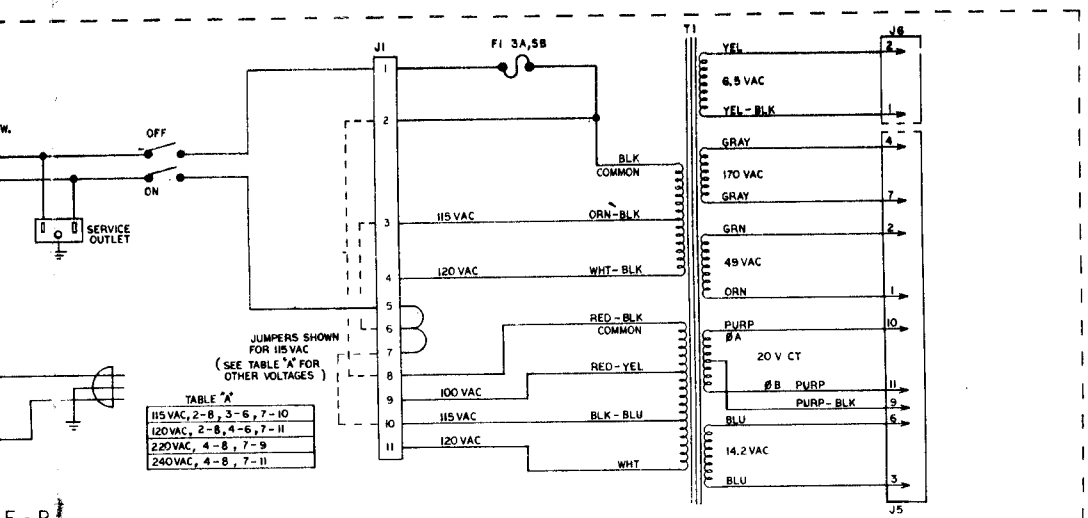

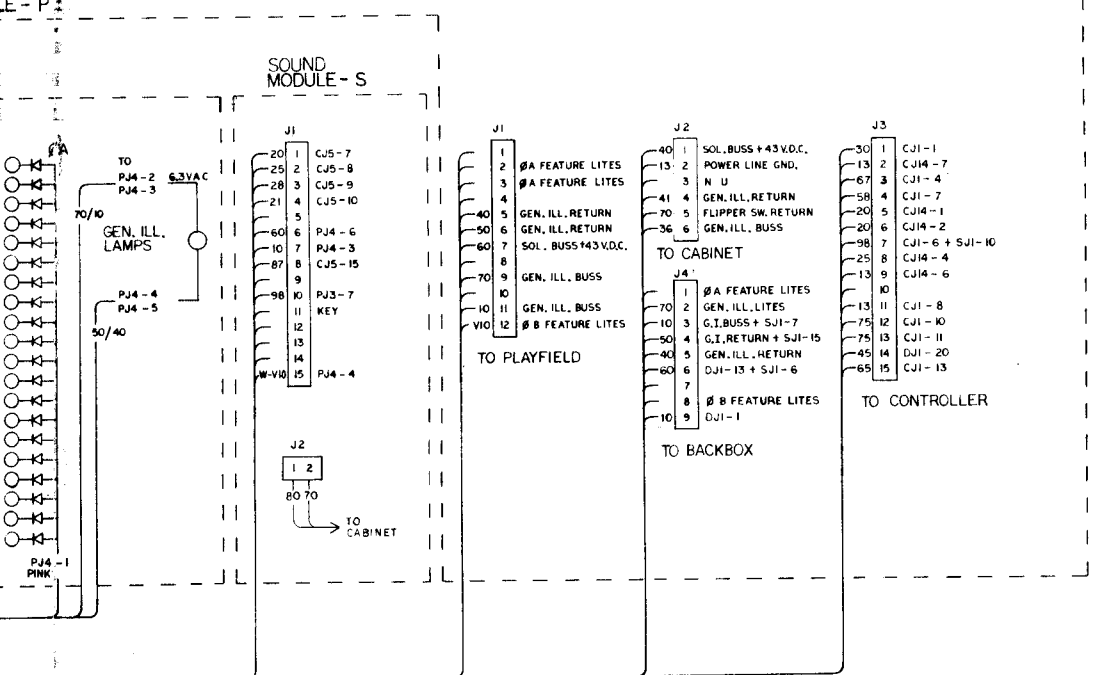

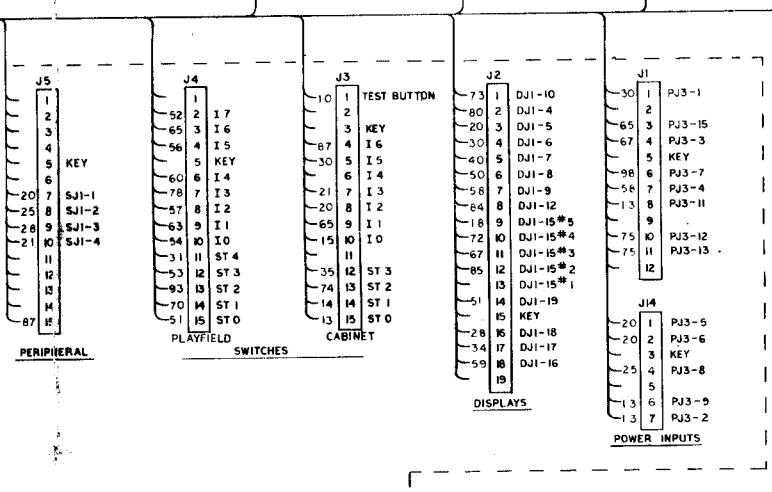

COLOR CODE	
1-RED	6-BROWN
2-BLUE	7-ORANGE
3-YELLOW	8-BLACK
4-GREEN	9-GRAY
5-WHITE	0-NO TRACE

REVISIONS

PROJECT ENG: —
DO NOT SCALE DWG
DIM. TOLERANCES UNLESS SPECIFIED
DRN. Th. Kondos
DATE 7/28/85
USED ON 8 BALL CHAMP
NO. REQ'D
SCALE
Bally / MIDWAY MFG. CO. FRANKLIN PK. ILL.
8 BALL CHAMP
BACKBOX DIAGRAM
PART NO. M051-00838-A088

BALLY/MIDWAY'S EIGHT BALL CHAMP PIN
#B38
ROM/EPROM PART NUMBERS

UNPROGRAMMED CONTROL BOARD A084-91786-C000
PROGRAMMED CONTROL BOARD A084-91786-AB38

POS.	MIDWAY PART NUMBER
U3	0B38-00803-0005

JUMPERS	IN	OUT
JW1		**
JW2	**	
JW3		**
JW4	**	
JW5		**
JW6	**	
JW7		**
JW8	**	
JW9		**
JW10	**	
JW11		**

UNPROGRAMMED SQUAWK & TALK A084-91625-A000
PROGRAMMED SQUAWK & TALK A084-91625-AB38

POS.	MIDWAY PART NUMBER
U3	0B38-00803-0002
U4	0B38-00803-0003
U5	0B38-00803-0004

JUMPERS	IN	OUT
A		**
B		**
C	**	
D	**	
E	**	
F		**
G	**	
H	**	
J		**
K		**
L	**	
M		**
N	**	
P		**
Q	**	
R		**
S	**	
T		**
U	**	
V		**
W	**	
X		**
Y	**	
Z		**
AA	**	
BB		**
CC		**
DD	**	
EE		**
FF	**	

M051-00B38-A009	REVISIONS
7-17-85	RELEASE FOR PRODUCTION